MONTGOMERY COUNTY NY
BUSINESS DEVELOPMENT CENTER
Made of Something Stronger

Meeting Notice

TO: **Board Members**

FROM: **Andrew Santillo**

DATE: **August 12, 2021**

RE: **Planning Board Meeting**

The regular meeting of the Montgomery County Planning Board is scheduled for Thursday, August 19, 2021 at 6:30 p.m. at the Montgomery County Business Development Center, 9 Park Street, Fonda, NY.

Please call Karl at (518) 853-8334 between 8:30 a.m. and 4:00 p.m. if you have any questions.

cc: The Recorder
Montgomery Co. Legislature
DPW
The Leader Herald
Daily Gazette

MONTGOMERY COUNTY NY
BUSINESS DEVELOPMENT CENTER
Made of Something Stronger

MONTGOMERY COUNTY PLANNING BOARD MEETING

Thursday, August 19, 2021

6:30 PM – Montgomery County Business Development Center, 9 Park Street, Fonda, NY

I. Pledge of Allegiance

II. Role Call

III. Adoption of Agenda

IV. Approval of previous meeting minutes

V. Public comments on agenda items (3 minute limit per person)

VI. Town of Florida — Zoning Update

VII. City of Amsterdam — Site Plan Review

VIII. Town of Amsterdam — Zoning Update

IX. Any other business

Department of Economic Development and Planning,
Industrial Development Agency & Capital Resource Corporation
9 Park Street, P.O. Box 1500, Fonda, NY 12068 p: 518.853.8334 f: 518.853.8336
www.montgomerycountyworks.com

Montgomery County Planning Board
Meeting Minutes
June 10th, 2021
(digital meeting via Zoom)

MEMBERS PRESENT:

Wayne DeMallie, Chairman
Ronald Jemmott, Member
Irene Collins, Member
David Wiener, Member
John Lyker, Member
Mark Hoffman, Vice Chair
Doug Stahura, Member

STAFF MEMBERS PRESENT:

Alex Kuttesch, Senior Planner
Karl Gustafson Jr., Grant Assistant
Andrew Santillo, Economic Dev. Assistant

ABSENT:

Betty Sanders, Alternate
Angela Frederick, Member
Erin Covey, Member

OTHERS PRESENT:

Jim Edwards, CT Male
Tim Riley, Town of Glen
Eric Redding, Solar Project
Jack Raymer, Pilot Project

I. Call to Order

The meeting was called to order by Chairman Wayne DeMallie at 6:31 p.m.

II. Roll Call

The roll call of board members was done by Chairman DeMallie.

III. Adoption of the Agenda

John Lyker made a motion to adopt the agenda, Mark Hoffman seconded. All members present were in favor.

IV. Approval of Previous Meeting's Minutes

Dave Wiener made a motion to accept previous meeting minutes, Ron Jemmott seconded the motion. John Lyker abstained. The previous minutes were approved.

V. Public Comment

There was no public comment.

VI. Town of Amsterdam- Site Plan Review

Alex Kuttesch explained to the board that this project is a storage unit facility located in the Town of Amsterdam. Three of the buildings will be 30'x 150' and one building is 20'x150'. David Wiener stated that he reviewed the site plan and had no comments, pointed out that there will be no use of public water at the site. There was no other discussion.

Dave Wiener made the motion to approve the referral, seconded by John Lyker. All were in favor.

The referral was approved.

VII. Town of Glen- Special Use Permit

Alex Kuttesch explained that this will be a special use permit referral for a Pilot truck stop and Taco Bell in the Town of Glen just off the New York State Thruway. David Wiener stated that every form was complete and CT Male was very thorough. There was no other discussion.

Dave Wiener made the motion to approve the referral, seconded by Ron Jemmott. All were in favor.

The referral was approved.

VIII. Town of Mohawk- Site Plan Review

Alex Kuttesch stated that this referral is a site plan review and an area variance for a solar project in the Town of Mohawk. The solar project is applying for an area variance for 100 foot setbacks, with the Town's setbacks being 200'. This solar project will be 1.75 megawatt project on seven acres. There is a forest located on the southwest portion of the property and on the southeast portion of the property they are going to be constructing a fence.

Mark Hoffman, a member of the Town of Mohawk Planning board stated that their board sent this project to the zoning board for the area variance. Mark also stated that there are only two neighbors in the area and they had no problem with the project. Eric Redding from the project stated that the project did receive the area variance with no push back.

David Wiener noticed there is no access road through the site. Eric Redding stated that there is only one equipment pad because this project is so small. There is also enough space for a

truck to drive completely around the project. Irene Collins asked if the project is visible from the road. Eric stated that on the southeast side you can see it from the road but they are planting evergreen trees to block the road and restated that the neighbors have no issue with the project.

John Lyker asked what the setbacks in the Town are. Eric restated that the Town's setbacks are 200 feet but they got the area variance to do 100 feet. John Lyker stated that the zoning board should follow the law that is on the books and stick to the 200 foot setbacks.

Ron Jemmott made a motion to approval the referral, seconded by Wayne DeMallie. There was a roll call vote. There were four Aye votes and one Nay vote. Doug Stahura excused himself before the action. Mark Hoffman abstained.

The board took no action on the referral and it will be sent back to the Town of Mohawk.

IX. Other Business

There was no other business.

X. Adjournment

David Wiener made a motion to adjourn the meeting at 7:10 p.m., seconded by Mark Hoffman. All were in favor.

Respectfully submitted,

_____

Karl Gustafson Jr.
Economic Development Grant Assistant

REFERRAL FORM
MONTGOMERY COUNTY PLANNING BOARD

Referral Number_____
assigned by the MCPB upon acceptance of referral for review

This Referral must be received **SEVEN CALENDAR DAYS** prior to the MCPB meeting date in order for it to be placed on the agenda.

TO: Montgomery County Planning Board,
Old County Courthouse,
PO Box 1500, Fonda, New York 12068
Phone: 518-853-8334
Fax: 518-853-8336

FROM: Municipal Board: Town of Florida
Referring Officer: Town Clerk
Mail original resolution to: Town Clerk
Town of Florida
214 Fort Hunter Road, Amsterdam, NY 12010

1. **Applicant:** Structure Development Group **2. Site Address:** Daniel Street - Town of Florida
3. **Tax Map Number(s):** 55.14-2-11 **4. Acres:** 6.8+/-
5. **Is the site currently serviced by public water?** ☐ Yes ☑ No
6. **On-site waste water treatment is currently provided by:** ☐ Public Sewer or ☐ Septic System
7. **Current Zoning**: Residential **8. Current Land Use**: Vacant - unused
9. **Project Description:** See attached narrative from Bohler Engineering

10. MCPB Jurisdiction:

☑ **Text Adoption or Amendment** ☐ **Site is located within 500' of:** _____

- ☐ a municipal boundary.
- ☑ a State or County thruway/highway/roadway
- ☐ an existing or proposed State or County park/recreation area
- ☐ an existing or proposed County-owned stream or drainage channel
- ☐ a State or County-owned parcel on which a public building or institution is situated
- ☐ a farm operation within an Agricultural District (Incl. Ag data Statement) (does not apply to area variances)

11. PUBLIC HEARING: Date: _____ Time: _____ Location: _____

Referred Action(s)

If referring multiple, related actions, please identify the referring municipal board if different from above.

12. ☐ **Text Adoption or** ☐ **Amendment** **Referring Board:**

☐ Comprehensive Plan ☐ Local Law ☐ Zoning Ordinance ☐ Other _____

13. ☑ **Zone Change** **Referring Board:**

Proposed Zone District: IBP - Industrial Business Park Number of Acres: 6.8+/-

Purpose of the Zone Change: Lots abutting it are IBP and NYS Thruway on 2 sides; Residential on 3rd side. Would like to develop the site for a custom truck accessories/part production modifications and associated parking facilities, appurtenant utilities, and a new driveway to Daniel Street.

14. ☐ **Site Plan** ☐ **Project Site Review** **Referring Board:**

Proposed Improvements: _____

Proposed Use: _____

Will the proposed project require a variance? ☐ Yes ☐ No Type: ☐ Area ☐ Use

Specify: _____

Is a State of County DOT work permit needed? If Yes : ☐ State or ☐ County ☐ No

Specify: _____

15. ☐ **Special Permit** **Referring Board:**

Section of local zoning code that requires a special permit for this use: _____

Will the proposed project require a variance? ☐ Yes ☐ No Type: ☐ Area ☐ Use

16. Variance **Referring Board:**

☐ Area ☐ Use

Section(s) of local zoning code to which the variance is being sought: _____

Describe how the proposed project varies from the above code section: _____

_____

SEQR Determination

Action:

- ☐ Type I
- ☐ Type II
- ☐ Unlisted Action
- ☑ Exempt

Finding:

- ☐ Positive Declaration – Draft EIS
- ☐ Conditional Negative Declaration
- ☐ Negative Declaration
- ☐ No Finding (Type II Only)

SEQR determination made by (Lead Agency): _____ **Date**: _____

REQUIRED MATERIAL

Send 3 copies of a "Full Statement of the Proposed Action" which includes:

All materials required by and submitted to the referring body as an application

- If submitting site plans, please submit only 1 large set of plans, and 12 11x17 packets.
- All material may be submitted digitally as well at http://www.mcbdc.org/planning-services/montgomery-county-planning-board-referrals/

This referral, as required by GML §239 l and m, includes complete information, and supporting materials to assist the Montgomery County Planning Board (MCPB) in its review. Recommendations by MCPB shall be made to the Referring Body within thirty days of receipt of the Full Statement.

Emily Staley - Town Clerk 518-843-6372 ext 1 July 29, 2021

Name, Title & Phone Number of Person Completing this Form Transmittal Date

This side to be completed by Montgomery County Planning.

REFERRAL FORM

MONTGOMERY COUNTY PLANNING BOARD

TO: _____

Receipt of 239-m referral is acknowledged on _____. Please be advised that the Montgomery County Planning Board has reviewed the proposal stated on the opposite side of this form on _____ and makes the following recommendation.

☐ Approves

☐ Approves (with Modification)

☐ ☐ Disapproves:

☐ No significant County-wide or inter-community input

☐ Not subject to Planning Board review

☐ Took no action

Section 239-m of the General Municipal Law requires that within thirty days after final action by the municipality is taken; a report of the final action shall be filed with the County Planning Board.

_____
Date

_____
Kenneth F. Rose, Director
Montgomery County Dept. of Economic
Development and Planning

Proposed Rezone
Tax ID: 55.14-2-11
Daniel Street
Town of Florida
Montgomery County, New York

Project Narrative / Report
June 28, 2021

The applicant (Structure Development Group, LLC) is proposing to rezone and develop an existing 6.8± acre vacant lot within the Town of Florida.

The site is bounded by Daniel Street on the north across from R+L Carriers, an Industrial Business Park zoned (IBP) parcel. I-90, The NYS Thruway, is located to the south. To the east is an IBP zoned lot containing a parking lot and to the west are Residentially zoned lots containing single family homes.

The proposed improvements consist of constructing a garage for custom truck accessories/ part production, modifications and associated parking facilities, appurtenant utilities, and a new driveway to Daniel Street.

To accomplish this, Structure Development Group, LLC is proposing to rezone the subject property from R-1 Residential to IBP - Industrial Business Park. As noted above the subject parcel is abutted by IBP lots currently and the NYS Thruway making it difficult for a new residential use development.

This proposed rezone would also comply with the Amendments to the Town of Florida Comprehensive Plan, dated February 21, 2011. The Comprehensive Plan Amendments: Chapter 8: Future Zoning Ordinance Issues: number 7 states "*The Town envisions that industrial growth will continue in the concentrated area around the designated IBP district, away from the more rural and residential portions of the Town.*" We believe that this rezone will help accomplish that objective as our site borders the IBP Industrial Business Park.

In conclusion, we feel that the proposed rezone would meet the objective of the Comprehensive Plan and be an appropriate modification/expansion to the existing Industrial Zoning District.

Short Environmental Assessment Form
Part 1 - Project Information

Instructions for Completing

Part 1 – Project Information. The applicant or project sponsor is responsible for the completion of Part 1. Responses become part of the application for approval or funding, are subject to public review, and may be subject to further verification. Complete Part 1 based on information currently available. If additional research or investigation would be needed to fully respond to any item, please answer as thoroughly as possible based on current information.

Complete all items in Part 1. You may also provide any additional information which you believe will be needed by or useful to the lead agency; attach additional pages as necessary to supplement any item.

Part 1 – Project and Sponsor Information

Name of Action or Project:

Proposed Lot Rezone

Project Location (describe, and attach a location map):

Daniel Street, Town of Florida, NY (Tax ID: 55.14-2-11)

Brief Description of Proposed Action:

A 6.8+/- acre vacant lot within the Town of Florida is proposed to be rezoned from an R-1, Residential zoned property to the adjacent IBP, Industrial Business Park zoned property.

Name of Applicant or Sponsor:	Telephone: 518-438-9900
Structure Development, LLC c/o Bohler Engineering MA, LLC	E-Mail: Cboyea@bohlereng.com

Address:

17 Computer Drive West

City/PO:	State:	Zip Code:
Albany	NY	12205

	NO	YES
1. Does the proposed action only involve the legislative adoption of a plan, local law, ordinance, administrative rule, or regulation? If Yes, attach a narrative description of the intent of the proposed action and the environmental resources that may be affected in the municipality and proceed to Part 2. If no, continue to question 2.	☐	☑
2. Does the proposed action require a permit, approval or funding from any other government Agency? If Yes, list agency(s) name and permit or approval:	☐	☐

3. a. Total acreage of the site of the proposed action? _____ acres
   b. Total acreage to be physically disturbed? _____ acres
   c. Total acreage (project site and any contiguous properties) owned or controlled by the applicant or project sponsor? _____ acres

4. Check all land uses that occur on, are adjoining or near the proposed action:

5. ☐ Urban ☐ Rural (non-agriculture) ☐ Industrial ☐ Commercial ☐ Residential (suburban)
   ☐ Forest ☐ Agriculture ☐ Aquatic ☐ Other(Specify):
   ☐ Parkland

	NO	YES	N/A
5. Is the proposed action,			
a. A permitted use under the zoning regulations?	☐	☐	☐
b. Consistent with the adopted comprehensive plan?	☐	☐	☐

	NO	YES
6. Is the proposed action consistent with the predominant character of the existing built or natural landscape?	☐	☐
7. Is the site of the proposed action located in, or does it adjoin, a state listed Critical Environmental Area? If Yes, identify: _____	☐	☐
8. a. Will the proposed action result in a substantial increase in traffic above present levels?	☐	☐
b. Are public transportation services available at or near the site of the proposed action?	☐	☐
c. Are any pedestrian accommodations or bicycle routes available on or near the site of the proposed action?	☐	☐
9. Does the proposed action meet or exceed the state energy code requirements? If the proposed action will exceed requirements, describe design features and technologies: _____	☐	☐
10. Will the proposed action connect to an existing public/private water supply? If No, describe method for providing potable water: _____	☐	☐
11. Will the proposed action connect to existing wastewater utilities? If No, describe method for providing wastewater treatment: _____	☐	☐
12. a. Does the project site contain, or is it substantially contiguous to, a building, archaeological site, or district which is listed on the National or State Register of Historic Places, or that has been determined by the Commissioner of the NYS Office of Parks, Recreation and Historic Preservation to be eligible for listing on the State Register of Historic Places?	☐	☐
b. Is the project site, or any portion of it, located in or adjacent to an area designated as sensitive for archaeological sites on the NY State Historic Preservation Office (SHPO) archaeological site inventory?	☐	☐
13. a. Does any portion of the site of the proposed action, or lands adjoining the proposed action, contain wetlands or other waterbodies regulated by a federal, state or local agency?	☐	☐
b. Would the proposed action physically alter, or encroach into, any existing wetland or waterbody? If Yes, identify the wetland or waterbody and extent of alterations in square feet or acres: _____	☐	☐

14. Identify the typical habitat types that occur on, or are likely to be found on the project site. Check all that apply:

☐ Shoreline ☐ Forest ☐ Agricultural/grasslands ☐ Early mid-successional

☐ Wetland ☐ Urban ☐ Suburban

	NO	YES
15. Does the site of the proposed action contain any species of animal, or associated habitats, listed by the State or Federal government as threatened or endangered?	☐	☐
16. Is the project site located in the 100-year flood plan?	☐	☐
17. Will the proposed action create storm water discharge, either from point or non-point sources?	☐	☐
If Yes,		
a. Will storm water discharges flow to adjacent properties?	☐	☐
b. Will storm water discharges be directed to established conveyance systems (runoff and storm drains)?	☐	☐
If Yes, briefly describe: _____		
18. Does the proposed action include construction or other activities that would result in the impoundment of water or other liquids (e.g., retention pond, waste lagoon, dam)? If Yes, explain the purpose and size of the impoundment: _____	☐	☐
19. Has the site of the proposed action or an adjoining property been the location of an active or closed solid waste management facility? If Yes, describe: _____	☐	☐
20. Has the site of the proposed action or an adjoining property been the subject of remediation (ongoing or completed) for hazardous waste? If Yes, describe: _____	☐	☐

I CERTIFY THAT THE INFORMATION PROVIDED ABOVE IS TRUE AND ACCURATE TO THE BEST OF MY KNOWLEDGE

Applicant/sponsor/name: Bohler Engineering MA, LLC : Matt Cossoul Date: 7/27/21

Signature: Matt C Title: Sr. Design Engineer

PRINT FORM

SITE INFORMATION

1. APPLICANT / CONTRACT PURCHASER:
   STRUCTURE DEVELOPMENT GROUP, LLC
2. OWNER:
   STRUCTURE DEVELOPMENT GROUP, LLC
3. PARCEL:
   55.14-2-11
   DANIEL STREET
   TOWN OF FLORIDA
   MONTGOMERY COUNTY, NY

NOT TO SCALE

BOHLER

SITE CIVIL AND CONSULTING ENGINEERING
LAND SURVEYING
PROGRAM MANAGEMENT
LANDSCAPE ARCHITECTURE
SUSTAINABLE DESIGN
PERMITTING SERVICES
TRANSPORTATION SERVICES

THE INFORMATION, DESIGN AND CONCEPT THEY EXHIBIT PROPRIETARY AND SHALL NOT BE COPIED OR USED FOR ANY PURPOSE WITHOUT PRIOR WRITTEN AUTHORIZATION FROM BOHLER. ONLY APPROVED, SIGNED AND SEALED PLANS SHALL BE VALID FOR CONSTRUCTION PURPOSES
© BOHLER

REVISIONS

REV	DATE	COMMENT	DRAWN BY / CHECKED BY

Know what's below. Call before you dig.

ALWAYS CALL 811

It's fast. It's free. It's the law.

FOR CONCEPT PURPOSES ONLY

THIS DRAWING IS INTENDED FOR MUNICIPAL AND/OR AGENCY REVIEW AND APPROVAL. IT IS NOT INTENDED AS A CONSTRUCTION DOCUMENT UNLESS INDICATED OTHERWISE.

PROJECT No.:	B210113
DRAWN BY:	JLG
CHECKED BY:	SRW
DATE:	06/28/2021
CAD I.D.:	B210113-CONCEPT C

PROJECT:

PROPOSED SITE CONCEPT

FOR

STRUCTURE DEVELOPMENT

PROPOSED DEVELOPMENT

MAP 55.14, BLOCK 2, LOT 11
DANIEL STREET
TOWN OF FLORIDA
MONTGOMERY COUNTY, NEW YORK

BOHLER
17 COMPUTER DRIVE WEST
ALBANY, NY 12205
Phone: (518) 438-9900
Fax: (518) 438-0900
www.BohlerEngineering.com

W.D. GOEBEL
PROFESSIONAL ENGINEER
MASSACHUSETTS LICENSE No. 42644-C
RHODE ISLAND LICENSE No. 7268
CONNECTICUT LICENSE No. 21854
NEW HAMPSHIRE LICENSE No. 10280
MAINE LICENSE No. 9490
NEW YORK LICENSE No. 071284-1
FLORIDA LICENSE No. 66202

SHEET TITLE:

REZONE EXHIBIT

SHEET NUMBER:

C-000

ORG. DATE - 06/28/2021

N
W
E
S
ZONE: R-1 (RESIDENTIAL)
ZONE: R-1 (RESIDENTIAL)
ZONE: R-1 (RESIDENTIAL)
ZONE: R-1 (RESIDENTIAL)
ZONE: R-1 (RESIDENTIAL)
RESIDENTIAL (R-1) ZONE
IND. BUSINESS PARK (IBP) ZONE
DANIEL ST
PROPOSED ZONE LINE
SUBJECT PARCEL (6.8 ± ACRES)
NYS THRUWAY (1-90)

DANIEL STREET

REFERRAL FORM
MONTGOMERY COUNTY PLANNING BOARD

Referral Number_____
assigned by the MCPB upon acceptance of referral for review

This Referral must be received **SEVEN CALENDAR DAYS** prior to the MCPB meeting date in order for it to be placed on the agenda.

TO: Montgomery County Planning Board,
Old County Courthouse,
PO Box 1500, Fonda, New York 12068
Phone: 518-853-8334
Fax: 518-853-8336

FROM: Municipal Board: C Amsterdam Planning Comm
Referring Officer: Paul Gaun
Mail original resolution to: Robin Wardon
61 Church Street, Amsterdam, NY 12010

1. **Applicant:** T-Mobile **2. Site Address:** 27-31 Main Street
3. **Tax Map Number(s):** 55.43.1-3 **4. Acres:** 0.43
5. **Is the site currently serviced by public water?** ☑ Yes ☐ No
6. **On-site waste water treatment is currently provided by:** ☑ Public Sewer or ☐ Septic System
7. **Current Zoning:** DC/FBC **8. Current Land Use:** _____
9. **Project Description:** rooftop antenna upgrades on existing equipment

10. **MCPB Jurisdiction:**

☐ **Text Adoption or Amendment** ☑ **Site is located within 500' of:** NYS Rt. 5 *(Specify by Name)*

Check All That Apply
- ☐ a municipal boundary.
- ☑ a State or County thruway/highway/roadway
- ☐ an existing or proposed State or County park/recreation area
- ☐ an existing or proposed County-owned stream or drainage channel
- ☐ a State or County-owned parcel on which a public building or institution is situated
- ☐ a farm operation within an Agricultural District (Incl. Ag data Statement) (does not apply to area variances)

11. **PUBLIC HEARING:** Date: 7/28/2021 Time: 6:30pm Location: Planning Commission

Referred Action(s)
If referring multiple, related actions, please identify the referring municipal board if different from above.

12. ☐ **Text Adoption or** ☐ **Amendment** **Referring Board:**
☐ Comprehensive Plan ☐ Local Law ☐ Zoning Ordinance ☐ Other _____

13. ☐ **Zone Change** **Referring Board:**
Proposed Zone District: _____ Number of Acres: _____
Purpose of the Zone Change: _____

14. ☑ **Site Plan** ☐ **Project Site Review** **Referring Board:** Amsterdam Planning Comm.
Proposed Improvements: rooftop antenna upgrades
Proposed Use: _____
Will the proposed project require a variance? ☐ Yes ☑ No Type: ☐ Area ☐ Use
Specify: _____
Is a State of County DOT work permit needed? If Yes : ☐ State or ☐ County ☑ No
Specify: _____

15. ☐ **Special Permit** **Referring Board:**

Section of local zoning code that requires a special permit for this use: _____

Will the proposed project require a variance? ☐ Yes ☐ No Type: ☐ Area ☐ Use

16. Variance **Referring Board:**

☐ Area ☐ Use

Section(s) of local zoning code to which the variance is being sought: _____

Describe how the proposed project varies from the above code section: _____

_____

SEQR Determination

Action:		**Finding:**
Check One	☐ Type I	☐ Positive Declaration – Draft EIS
	☐ Type II	☐ Conditional Negative Declaration
	☑ Unlisted Action	☑ Negative Declaration
	☐ Exempt	☐ No Finding (Type II Only)

SEQR determination made by (Lead Agency): Amsterdam Planning Comm. **Date:** 7/28/2021

REQUIRED MATERIAL

Send 13 copies of a "Full Statement of the Proposed Action" which includes:

All materials required by and submitted to the referring body as an application

- If submitting site plans, please submit only 1 large set of plans, and 12 11x17 packets.
- All material may be submitted digitally as well at http://www.mcbdc.org/planning-services/montgomery-county-planning-board-referrals/

This referral, as required by GML §239 l and m, includes complete information, and supporting materials to assist the Montgomery County Planning Board (MCPB) in its review. Recommendations by MCPB shall be made to the Referring Body within thirty days of receipt of the Full Statement.

Amanda Bearcroft 518.841.4304 — 7/30/2021

Name, Title & Phone Number of Person Completing this Form — Transmittal Date

This side to be completed by Montgomery County Planning.

REFERRAL FORM

MONTGOMERY COUNTY PLANNING BOARD

TO: _____

Receipt of 239-m referral is acknowledged on _____. Please be advised that the Montgomery County Planning Board has reviewed the proposal stated on the opposite side of this form on _____ and makes the following recommendation.

☐ Approves

☐ Approves (with Modification)

☐ Disapproves:

☐ No significant County-wide or inter-community input

☐ Not subject to Planning Board review

☐ Took no action

Section 239-m of the General Municipal Law requires that within thirty days after final action by the municipality is taken; a report of the final action shall be filed with the County Planning Board.

_____
Date

_____
Kenneth F. Rose, Director
Montgomery County Dept. of Economic
Development and Planning

CITY OF AMSTERDAM
ENGINEERING DEPARTMENT
CITY HALL, RM. 201
AMSTERDAM, NY 12010

APPLICATION FOR PERMIT DENIED: Case # 21-24P

Official Use Only

This is the decision of the Zoning Officer of the City of Amsterdam.

REFERRAL TO PLANNING COMMISSION FOR SITE PLAN REVIEW (P)

X *SITE PLAN ___ SPECIAL USE PERMIT ___ SUBDIVISION of LAND

And/or OFFICIAL DECISION FOR DENYING APPLICATION FOR PERMIT (Z)

___ USE VARIANCE ___ AREA VARIANCE ___ USE/TEXT/MAP INTERPRETATION

LOCATION of SUBJECT PROPERTY: 27-31 Main Street

Subject property is in a DC/FBC Zoning District. SBL# 55.43.1-3

Proposed use or construction or installation:
Rooftop antenna upgrades

The undersigned, having examined the plans and specifications and plot or site plan submitted by the applicant(s), makes the following findings:

( ) Prior approval of a special permit is required by the provisions of the Zoning Ordinance of the City of Amsterdam.

(X) Prior approval of a *Site Plan is required by the provisions of the Zoning Ordinance of the City of Amsterdam.

( ) Proposed use, construction or installation is in violation of Section(s) _____ of the Zoning Ordinance of the City of Amsterdam, in that

Dated: 7-19-21

Zoning Officer/Building Official

☐ Copied to Engineering Aid

☐ Copied to Corporation Counsel Office

APPLICANT(S): T-Mobile Cassandra Darmody

Mailings to: Legal Address 6615 Towpath Road
East Syracuse, NY 13057

Contact Phone #: 315-569-9241

Dated: 07/13/2021 Email: CDarmody@PyramidNS.com

Cassandra Darmody
Applicant Signature

Co-Applicant Signature

BDH-11

CITY OF AMSTERDAM

BOARD OF APPEALS
CITY HALL
61 CHURCH ST.
AMSTERDAM, NY 12010

ZONING OFFICE
CITY HALL
RM. 201

APPLICATION TO BOARD OF APPEALS

The under signed hereby makes application for appeal with the attached application, plans and specifications: **Attention all pertinent information below shall be filled in or application will be denied.**

A. NATURE OF APPLICATION

Application is hereby made to the Board of Appeals for (check appropriate item):

( ) Prior approval of subdivision is required by the provisions of Chapter 210, Code of the City of Amsterdam **(Complete Block E)**

( ) Approval of a Special Permit as required by the provisions of the Zoning Ordinance. **(Complete Blocks B and E)**

(X) Approval of a Site Plan as required by the provisions of the Zoning Ordinance. **(Complete Blocks B and E)**

( ) Review of a decision of the Zoning Officer in denying a Building Permit or Certificate of Occupancy. **(Complete Blocks C and E)**

( ) Zoning Officer request for an interpretation of the Zoning Law, Use/Text/Map. **(Complete Blocks D and E)**

Description of Premises Involved: Applicant shall fill in below. 27-31 Main St

The property or properties involved are identified as follows Replace existing painted antennas and equipment with like painted antennas and equipment

B. IF APPLICATION IS FOR A SPECIAL USE PERMIT OR SITE PLAN APPROVAL

The applicant proposes to use the premises for the following purposes (give details) Premises will remain telecommunication facility

C. IF APPLICATION IS FOR A REVIEW, OF DECISION OF THE ZONING OFFICER

1. The applicant requests relief from the decision of the Zoning Officer with respect to the following section(s) of Zoning Ordinance _____
2. The applicant proposes to use the premises for the following purposes (give details) Premises will remain telecommunication facility
3. The applicant certifies that the following special circumstances apply to his or her property but do not apply generally to land or buildings in the neighborhood There is existing antennas and equipment.

see pg. 2

4. The applicant certifies that no permissible use of his property will produce a reasonable return for the following reasons This is an existing telecommunication facility

5. The applicant certifies that the relief requested is the minimum variance which will enable reasonable use of his property for the following reasons An existing telecommunication facility antennas will shift in location for better coverage

6. The applicant certifies that the proposed use will not be injurious to the character of the neighbor for the following reasons This is an existing telecommunication facility therefore minimal change from existing facility.

7. The applicant has owned the subject property since _____.
The applicant certifies that he owns the following adjoining property _____

D. IF APPLICATION IS FOR AN INTERPRETATION TO THE USE/TEXT/MAP

The interpretation is as follows _____

E. MAPS, PLANS OR INFORMATION SUBMITTED HEREWITH

The following are submitted herewith (list and identify accurately) See attached plan. Site map.

*** Applicant must fill in all information below and sign application and if the applicant is not the owner of the for-mentioned premises then the Owner must also sign application.**

*** Applicant Name (Please Print):** Cassandra Darmody

Mailings to Legal Address: 6615 Towpath Road, East Syracuse, NY 13057

Applicant's Contact Telephone Number: 315-569-9241

*** Owner Name (If other than applicant):** Cranesville Properties LLC

Owner Address: 1250 Riverfront Center, Amsterdam , NY, 12010

*** Owner Signature:** _____

*** Applicant Signature:** Cassandra Darmody

Date: 7/13/2021

OFFICE USE ONLY

Building Department: 1 copy needed

Date Received 7/16/21

Case No. 21-24P

Is property situated in 500 feet of Montgomery County referral buffer zone?

_____ YES – Preliminary review for Montgomery County Planning Board
_____ NO

City Clerk: original needed

Date Received 7/16/21

Fee Paid $75 –

RECEIVED
JUL 19 2021
BY: SL

Zoning Board of Appeals: 6 copies needed

Date Received N/A

Fee Paid _____

Planning Commission: 8 copies needed

Date Received 7/16/21

Fee Paid $750

Applicant: 1 copy

SPRINT RETAIN

SPRINT/T–MOBILE SITE I.D. NUMBER:

UP40156A

SPRINT/T–MOBILE SITE NAME:

FORMER FIRST NATIONAL BANK

CONFIGURATION:

67D5A997DB 6160

SPRINT SITE I.D. NUMBER:

AL53XC833

VICINITY MAP

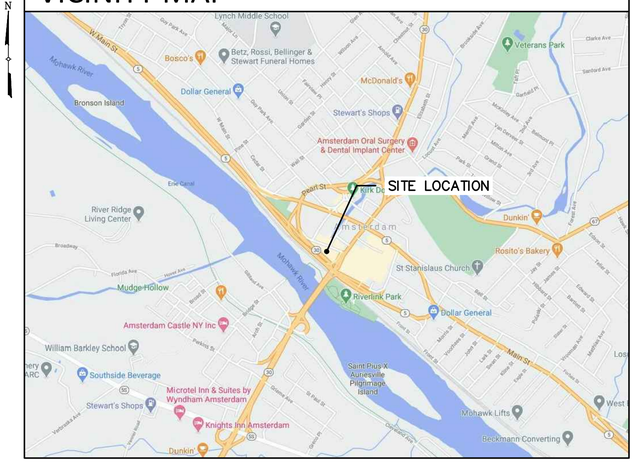

SITE DIRECTIONS

DRIVING DIRECTIONS FROM LIVERPOOL SPRINT/T–MOBILE OFFICE:

MERGE ONTO I–90 E (109± MILES). TAKE EXIT 27 TO MERGE ONTO NY–30 N (1.8± MILES). CONTINUE ONTO CHURCH ST/N SOUTH ARTERIAL (19.3± MILES). TURN LEFT ONTO MILTON AVE (0.2± MILES). TURN RIGHT ONTO MALTA AVE (1.5± MILES). TURN LEFT ONTO OLD POST RD (1.9± MILES). TURN LEFT ONTO U.S. 9 N (2.3± MILES). TURN RIGHT ONTO CRESCENT AVE (0.8± MILES). TURN LEFT ONTO BUNNY LAKE DR (0.2± MILES). THE DESTINATION WILL BE ON THE LEFT.

PROJECT SUMMARY

T–MOBILE SITE NUMBER:	UP40156A
SPRINT ID NUMBER:	AL53XC833
SITE ADDRESS:	29 EAST MAIN STREET AMSTERDAM, NY 12010
COUNTY:	MONTGOMERY COUNTY
TAX MAP PARCEL #:	55.43–1–3
ZONING DISTRICT:	RB – RETAIL BUSINESS
APPLICANT/ TOWER OWNER:	SPRINT 3 ENTERPRISE DRIVE ALBANY, NY 12204
LANDOWNER:	JOHN A TESIERO JR 2000 RIVERFRONT CENTER AMSTERDAM, NY 12010
STRUCTURE TYPE:	ROOFTOP
STRUCTURE HEIGHT:	112'±
ANTENNA RAD CENTER:	107'±
LATITUDE: (NAD 83)	42° 56' 12.22" N 42.936727°
LONGITUDE: (NAD 83)	74° 11' 34.60" W –74.192944°
GRADE ELEVATION:	280'± AMSL

PROJECT MANAGER:	JOHN CUTTONE SITE ACQUISITION CONSULTANT FOR SPRINT/T–MOBILE PYRAMID NETWORK SERVICES, LLC (631) 445–0653 JCUTTONE@PYRAMIDNETWORKSERVICES.COM
ENGINEER:	TECTONIC ENGINEERING CONSULTANTS, GEOLOGISTS & LAND SURVEYORS, D.P.C 36 BRITISH AMERICAN BLVD SUITE 101 LATHAM, NY 12110
CONTACT:	STEVE MATTHEWS (518) 783–1630
POWER PROVIDER: CONTACT:	T.B.D. T.B.D.
FIBER PROVIDER: CONTACT:	T.B.D. T.B.D.

APPLICABLE CODES

DESIGN CRITERIA:

ALL WORK AND MATERIALS SHALL BE PERFORMED AND INSTALLED IN ACCORDANCE WITH THE CURRENT EDITIONS OF THE FOLLOWING CODES AS ADOPTED BY THE LOCAL GOVERNING AUTHORITIES, NOTHING IS THESE PLANS ARE TO BE CONSTRUED TO PERMIT WORK NOT CONFORMING TO THESE CODES.

1. INTERNATIONAL BUILDING CODE 2018
2. 2020 NEW YORK STATE BUILDING CODE
3. ACCESSIBILITY CODE ADA 2015. BASED ON ICC/ANSI A117.1–LATEST EDITION
4. 2017 NATIONAL ELECTRIC CODE
5. FIRE/LIFE SAFETY CODE – IFC 2018
6. ANSI/TIA–222–H–2017 "STRUCTURAL STANDARDS FOR ANTENNA SUPPORTING STRUCTURES, ANTENNAS AND SMALL WIND TURBINE SUPPORT STRUCTURES".

Dig Safely. New York. Call 811 before you dig

SHEET INDEX

SHEET NO	DESCRIPTION	REV NO	REVISION DATE
T–1	TITLE SHEET	3	07/15/21
GN–1	NOTES	3	07/15/21
A–1	OVERALL SITE PLAN	3	07/15/21
A–2A	EXISTING EQUIPMENT LAYOUT PLAN	3	07/15/21
A–2B	PROPOSED EQUIPMENT LAYOUT PLAN	3	07/15/21
A–3	ELEVATION	3	07/15/21
A–4	ANTENNA PLANS	3	07/15/21
A–5	ANTENNA & HYBRID SCHEDULE	3	07/15/21
A–6	DETAILS	3	07/15/21
A–7	DETAILS	3	07/15/21
A–8	SLED MOUNT DETAILS	3	07/15/21
E–1	ELECTRICAL DETAILS	3	07/15/21
G–1	GROUNDING PLAN	3	07/15/21
G–2	GROUNDING DETAILS	3	07/15/21

THIS SET OF PLANS SHALL NOT BE UTILIZED AS CONSTRUCTION DOCUMENTS UNTIL ALL ITEMS HAVE BEEN ADDRESSED AND EACH OF THE DRAWINGS HAS BEEN REVISED AND ISSUED "FOR CONSTRUCTION".

PROJECT SCOPE OF WORK

MODIFICATION TO AN EXISTING UNMANNED TELECOMMUNICATIONS FACILITY TO CONSIST OF THE FOLLOWING:

- REMOVE (6) EXISTING SPRINT/T–MOBILE ANTENNAS
- REMOVE (12) EXISTING SPRINT/T–MOBILE RADIO HEADS
- REMOVE (3) EXISTING SPRINT/T–MOBILE HYBRID CABLES
- REMOVE (3) EXISTING SPRINT/T–MOBILE POWER COAX
- REMOVE (1) EXISTING SPRINT/T–MOBILE DISTRIBUTION BOX
- REMOVE (2) EXISTING SPRINT/T–MOBILE EQUIPMENT CABINET
- RELOCATE (1) EXISTING SPRINT/T–MOBILE WESTELL AAV CABINET
- INSTALL (3) PROPOSED SPRINT/T–MOBILE STANDOFF MOUNTS
- INSTALL (3) PROPOSED SPRINT/T–MOBILE APXVAALL24_43–UNA20 PANEL ANTENNAS
- INSTALL (3) PROPOSED SPRINT/T–MOBILE AIR6449 B41 PANEL ANTENNAS
- INSTALL (3) PROPOSED SPRINT/T–MOBILE AIR32 KRD901146–1_B66A_B2A PANEL ANTENNAS
- INSTALL (3) PROPOSED SPRINT/T–MOBILE RRUS–4415
- INSTALL (3) PROPOSED SPRINT/T–MOBILE RRUS–4449
- INSTALL (1) PROPOSED SPRINT/T–MOBILE SSC 6160 EQUIPMENT CABINET AT EQUIPMENT LEVEL
- INSTALL (1) PROPOSED SPRINT/T–MOBILE B160 BATTERY CABINET AT EQUIPMENT LEVEL
- INSTALL (3) PROPOSED SPRINT/T–MOBILE 6x24 HYBRID CABLES
- INSTALL (1) PROPOSED SPRINT/T–MOBILE 200A CAMLOCK GENERATOR PLUG

CONFIGURATION

67D5A997DB 6160

REFER TO LATEST T–MOBILE RF DATA SHEET FOR FINAL RF DESIGN & BOM

PYRAMID Network Services, LLC

Sprint Now part of T-Mobile

103 MONARCH DRIVE
LIVERPOOL, NY 13088

Tectonic
PRACTICAL SOLUTIONS. EXCEPTIONAL SERVICE.
Tectonic Engineering Consultants, Geologists & Land Surveyors, D.P.C.
70 Pleasant Hill Road
P.O. Box 37
Mountainville, NY 10953
Phone: (845) 534–5959
(800) 829–6531
www.tectonicengineering.com
Project Contact Info
36 British American Blvd.
Suite 101
Latham, NY 12110
Phone: (518) 783–1630

WORK ORDER NUMBER	DRAWN BY
10666.023	DAI

NO.	DATE	ISSUE
0	02/18/21	FOR COMMENT
1	05/06/21	FOR COMMENT
2	06/14/21	PER COMMENTS
3	07/15/21	FOR ZONING

RELEASED BY	DATE

STATE OF NEW YORK · ADRIAN HOWARD MASSIE · 101061 · LICENSED PROFESSIONAL ENGINEER
7/15/21

UNAUTHORIZED ALTERATION OR ADDITIONS TO A PLAN BEARING THE SEAL OF A LICENSED ENGINEER OR LAND SURVEYOR IS A VIOLATION OF SECTION 7209 SUBDIVISION 2 OF THE NEW YORK STATE EDUCATION LAW.

COPIES OF THIS DOCUMENT WITHOUT A FACSIMILE OF THE SIGNATURE AND AN ORIGINAL EMBOSSED SEAL OR ORIGINAL STAMP IN BLUE OR RED INK OF THE PROFESSIONAL ENGINEER OR LAND SURVEYOR SHALL NOT BE CONSIDERED VALID COPIES.

0 1 2 3
ORIGINAL SIZE IN INCHES

SITE INFORMATION

UP40156A
FORMER FIRST NATIONAL BANK
AL53XC833

SITE ADDRESS

29 EAST MAIN ST
CITY OF AMSTERDAM
MONTGOMERY COUNTY
NY 12010

SHEET TITLE

TITLE SHEET

SHEET NUMBER

T–1

GENERAL NOTES

1. ALL WORK SHALL CONFORM TO THE REQUIREMENTS OF THE STATE OF NEW YORK BUILDING CODE 2020, AND ALL OTHER APPLICABLE CODES AND ORDINANCES.
2. CONTRACTOR SHALL VISIT THE JOB SITE AND FAMILIARIZE HIMSELF WITH ALL CONDITIONS AFFECTING THE PROPOSED WORK AND MAKE PROVISIONS AS TO THE COST THEREOF. CONTRACTOR SHALL BE RESPONSIBLE FOR FAMILIARIZING HIMSELF WITH ALL CONTRACT DOCUMENTS, FIELD CONDITIONS AND DIMENSIONS AND CONFIRMING THAT THE WORK MAY BE ACCOMPLISHED AS SHOWN PRIOR TO PROCEEDING WITH CONSTRUCTION. ANY DISCREPANCIES SHALL BE BROUGHT TO THE ATTENTION OF THE ENGINEER PRIOR TO THE COMMENCEMENT OF WORK.
3. PLANS ARE NOT TO BE SCALED. THESE PLANS ARE INTENDED TO BE A DIAGRAMMATIC OUTLINE ONLY, UNLESS OTHERWISE NOTED. THE WORK SHALL INCLUDE FURNISHING MATERIALS, EQUIPMENT, APPURTENANCES, AND LABOR NECESSARY TO EFFECT ALL INSTALLATIONS AS INDICATED ON THE DRAWINGS.
4. DIMENSIONS SHOWN ARE TO FINISH SURFACES, UNLESS OTHERWISE NOTED. SPACING BETWEEN EQUIPMENT IS REQUIRED CLEARANCE. THEREFORE, IT IS CRITICAL TO FIELD VERIFY DIMENSIONS. SHOULD THERE BE ANY QUESTIONS REGARDING THE CONTRACT DOCUMENTS, EXISTING CONDITIONS AND/OR DESIGN INTENT, THE CONTRACTOR SHALL BE RESPONSIBLE FOR OBTAINING A CLARIFICATION FROM THE CARRIER'S AUTHORIZED REPRESENTATIVE OR THE ENGINEER PRIOR TO PROCEEDING WITH THE WORK.
5. DETAILS ARE INTENDED TO SHOW END RESULT OF DESIGN. MINOR MODIFICATIONS MAY BE REQUIRED TO SUIT JOB DIMENSIONS OR CONDITIONS, AND SUCH MODIFICATIONS SHALL BE INCLUDED AS PART OF THE WORK.
6. CONTRACTOR SHALL RECEIVE CLARIFICATION IN WRITING, AND SHALL RECEIVE IN WRITING AUTHORIZATION TO PROCEED BEFORE STARTING WORK ON ANY ITEMS NOT CLEARLY DEFINED OR IDENTIFIED BY THE CONTRACT DOCUMENTS.
7. CONTRACTOR SHALL NOTIFY THE CONSTRUCTION MANAGER OF ALL PRODUCTS OR ITEMS NOTED AS "EXISTING" WHICH ARE NOT FOUND TO BE IN THE FIELD.
8. CONTRACTOR SHALL SUPERVISE AND DIRECT THE WORK USING THE BEST CONSTRUCTION SKILLS AND ATTENTION. CONTRACTOR SHALL BE SOLELY RESPONSIBLE FOR CONSTRUCTION MEANS, METHODS, TECHNIQUES, SEQUENCES, PROCEDURES, AND FOR COORDINATING ALL PORTIONS OF THE WORK UNDER CONTRACT, UNLESS OTHERWISE NOTED.
9. ERECTION SHALL BE DONE IN A WORKMANLIKE MANNER BY COMPETENT EXPERIENCED WORKMEN IN ACCORDANCE WITH APPLICABLE CODES AND THE BEST ACCEPTED PRACTICE. ALL MEMBERS SHALL BE LAID PLUMB AND TRUE AS INDICATED ON THE DRAWINGS.
10. CONTRACTOR SHALL BE RESPONSIBLE FOR THE SAFETY OF THE WORK AREA, ADJACENT AREAS, AND BUILDING OCCUPANTS THAT ARE LIKELY TO BE AFFECTED BY THE WORK UNDER THIS CONTRACT. WORK SHALL CONFORM TO ALL OSHA REQUIREMENTS.
11. CONTRACTOR SHALL COORDINATE HIS WORK AND SCHEDULE HIS ACTIVITIES AND WORKING HOURS IN ACCORDANCE WITH THE REQUIREMENTS OF THE OWNER.
12. CONTRACTOR SHALL BE RESPONSIBLE FOR COORDINATING HIS WORK WITH THE WORK OF OTHERS AS IT MAY RELATE TO RADIO EQUIPMENT, ANTENNAS AND ANY OTHER PORTIONS OF THE WORK.
13. CONTRACTOR SHALL MAINTAIN LIABILITY INSURANCE TO PROTECT THE OWNER AND CARRIER.
14. INSTALL ALL EQUIPMENT AND MATERIALS IN ACCORDANCE WITH MANUFACTURER'S RECOMMENDATIONS UNLESS SPECIFICALLY INDICATED OR WHERE LOCAL CODES OR REGULATIONS TAKE PRECEDENCE.
15. MAKE NECESSARY PROVISIONS TO PROTECT EXISTING SURFACES, EQUIPMENT, IMPROVEMENTS, PIPING, ANTENNA AND ANTENNA CABLES. REPAIR ANY DAMAGE THAT OCCURS DURING CONSTRUCTION.
16. REPAIR ALL EXISTING SURFACES DAMAGED DURING CONSTRUCTION SUCH THAT THEY MATCH AND BLEND WITH ADJACENT SURFACES.
17. KEEP CONTRACT AREA CLEAN, HAZARD FREE, AND DISPOSE OF ALL DEBRIS AND RUBBISH. EQUIPMENT NOT SPECIFIED AS REMAINING ON THE PROPERTY OF THE OWNER SHALL BE REMOVED. LEAVE PREMISES IN CLEAN CONDITION AND FREE FROM PAINT SPOTS, DUST, OR SMUDGES OF ANY NATURE. CONTRACTOR SHALL BE RESPONSIBLE FOR MAINTAINING ALL ITEMS UNTIL COMPLETION OF CONSTRUCTION.
18. CONTRACTOR SHALL VERIFY ALL DIMENSIONS AND CONDITIONS IN THE FIELD PRIOR TO FABRICATION AND ERECTION OF ANY MATERIAL. ANY UNUSUAL CONDITIONS SHALL BE REPORTED TO THE ATTENTION OF THE ENGINEER.
19. CONTRACTOR SHALL SECURE ALL NECESSARY BUILDING PERMITS AND INSPECTIONS AND PAY ALL REQUIRED FEES.
20. PROVIDE A PORTABLE FIRE EXTINGUISHER WITH A RATING OF NOT LESS THAN 2-A OR 2-A/10-BC WITHIN 75 FEET TRAVEL DISTANCE TO ALL PORTIONS OF THE BUILDOUT AREA DURING CONSTRUCTION.
21. ALL BROCHURES, OPERATING AND MAINTENANCE MANUALS, CATALOGS, SHOP DRAWINGS AND OTHER DOCUMENTATION SHALL BE TURNED OVER TO CARRIER AT COMPLETION OF CONSTRUCTION.
22. COMPLETE JOB SHALL BE GUARANTEED FOR A PERIOD OF ONE (1) YEAR AFTER THE DATE OF ACCEPTANCE BY CARRIER. ANY WORK, MATERIALS, OR EQUIPMENT FOUND TO BE DEFECTIVE DURING THAT PERIOD SHALL BE CORRECTED IMMEDIATELY UPON WRITTEN NOTIFICATION AT NO ADDITIONAL COST TO CARRIER.
23. RIGGING OPERATIONS SHALL BE DONE IN ACCORDANCE WITH STATE AND FEDERAL SAFETY REGULATIONS (OSHA). TECTONIC, CARRIER AND THE OWNER SHALL BE HELD HARMLESS IN THE EVENT THE CONTRACTOR DOES NOT FOLLOW SUCH SAFETY REGULATIONS.
24. CONTRACTOR SHALL PROVIDE ACCESS TO THE SITE AND ASSIST THE RADIO EQUIPMENT VENDOR AND THE ANTENNA INSTALLATION CONTRACTOR AS THEY MAY REQUIRE.

ELECTRICAL INSTALLATION NOTES

1. ALL ELECTRICAL WORK SHALL BE PERFORMED IN ACCORDANCE WITH THE PROJECT SPECIFICATIONS, NEC AND ALL APPLICABLE LOCAL CODES.
2. ALL ELECTRICAL EQUIPMENT AND ACCESSORIES SHALL BE U.L. APPROVED OR LISTED.
3. CONDUIT ROUTINGS ARE SCHEMATIC. CONTRACTOR SHALL INSTALL CONDUITS SO THAT ACCESS TO EQUIPMENT IS NOT BLOCKED.
4. WIRING, RACEWAY AND SUPPORT METHODS AND MATERIALS SHALL COMPLY WITH THE REQUIREMENTS OF THE NEC.
5. ALL CIRCUITS SHALL BE SEGREGATED AND MAINTAIN MINIMUM CABLE SEPARATION AS REQUIRED BY THE NEC.
6. CABLES SHALL NOT BE ROUTED THROUGH LADDER-STYLE CABLE TRAY RUNGS.
7. EACH END OF EVERY POWER, POWER PHASE CONDUCTOR (I.E., HOTS), GROUNDING, AND T1 CONDUCTOR AND CABLE SHALL BE LABELED WITH COLOR-CODED INSULATION OR ELECTRICAL TAPE (3M BRAND, 1/2 INCH PLASTIC ELECTRICAL TAPE WITH UV PROTECTION, OR EQUAL). THE IDENTIFICATION METHOD SHALL CONFORM WITH NEC & OSHA.
8. ALL ELECTRICAL COMPONENTS SHALL BE CLEARLY LABELED WITH ENGRAVED LAMACOID PLASTIC LABELS. ALL EQUIPMENT SHALL BE LABELED WITH THEIR VOLTAGE RATING, PHASE CONFIGURATION, WIRE CONFIGURATION, POWER OR AMPACITY RATING, AND BRANCH CIRCUIT ID NUMBERS (I.E., PANELBOARD AND CIRCUIT ID'S).
9. PANELBOARDS (ID NUMBERS) AND INTERNAL CIRCUIT BREAKERS (CIRCUIT ID NUMBERS) SHALL BE CLEARLY LABELED WITH ENGRAVED LAMACOID PLASTIC LABELS.
10. POWER, CONTROL, AND EQUIPMENT GROUND WIRING IN TUBING OR CONDUIT SHALL BE SINGLE CONDUCTOR (#14 AWG OR LARGER), 600 V, OIL RESISTANT THHN OR THWN-2, STRANDED COPPER CABLE RATED FOR 90°C (WET AND DRY) OPERATION; LISTED OR LABELED FOR THE LOCATION AND RACEWAY SYSTEM USED, UNLESS OTHERWISE SPECIFIED.
11. SUPPLEMENTAL EQUIPMENT GROUND WIRING LOCATED INDOORS SHALL BE SINGLE CONDUCTOR (#6 AWG OR LARGER), 600 V, OIL RESISTANT THHN OR THWN-2 GREEN INSULATION, STRANDED COPPER CABLE RATED FOR 90°C (WET AND DRY) OPERATION; LISTED OR LABELED FOR THE LOCATION AND RACEWAY SYSTEM USED, UNLESS OTHERWISE SPECIFIED.
12. POWER AND CONTROL WIRING, NOT IN TUBING OR CONDUIT, SHALL BE MULTI-CONDUCTOR, TYPE USE-2 CABLE (#14 AWG OR LARGER), 600 V, OIL RESISTANT RHW-2 OR XHHW-2, STRANDED COPPER CABLE RATED FOR 90°C (WET AND DRY) OPERATION; WITH OUTER JACKET; LISTED OR LABELED FOR THE LOCATION USED, UNLESS OTHERWISE SPECIFIED.
13. ALL POWER AND GROUNDING CONNECTIONS SHALL BE CRIMP-STYLE, COMPRESSION WIRE LUGS AND WIRE NUTS BY THOMAS AND BETTS (OR EQUAL). LUGS AND WIRE NUTS SHALL BE RATED FOR OPERATION AT NO LESS THAN 90°C.
14. RACEWAY AND CABLE TRAY SHALL BE LISTED OR LABELED FOR ELECTRICAL USE IN ACCORDANCE WITH NEMA, UL, ANSI/IEEE, AND NEC.
15. ELECTRICAL METALLIC TUBING (EMT) OR RIGID METALLIC CONDUIT (RMC) SHALL BE USED FOR EXPOSED INDOOR LOCATIONS.
16. ELECTRICAL METALLIC TUBING (EMT) OR RIGID METALLIC CONDUIT (RMC) SHALL BE USED FOR CONCEALED INDOOR LOCATIONS.
17. PVC SCHEDULE 40 CONDUIT SHALL BE USED UNDERGROUND EXCEPT IN AREAS OF VEHICULAR TRAFFIC. IN SUCH AREAS, PVC SCHEDULE 80 SHOULD BE USED.
18. ALL OUTDOOR EXPOSED CONDUIT SHALL BE PVC SCHEDULE 80 AND SHALL BE SUPPORTED ADEQUATELY.
19. LIQUID-TIGHT FLEXIBLE METALLIC CONDUIT (LIQUID-TITE FLEX) SHALL BE USED INDOORS AND OUTDOORS, WHERE VIBRATION OCCURS OR FLEXIBILITY IS NEEDED. LFMC SHALL CONFORM TO NEC ARTICLE 350.
20. CONDUIT AND TUBING FITTINGS SHALL BE THREADED OR COMPRESSION-TYPE AND APPROVED FOR THE LOCATION USED. SET SCREW FITTINGS ARE NOT ACCEPTABLE.
21. CABINETS, BOXES, AND WIREWAYS SHALL BE LISTED OR LABELED FOR ELECTRICAL USE IN ACCORDANCE WITH NEMA, UL, ANSI/IEEE, AND NEC.
22. WIREWAYS SHALL BE EPOXY-COATED (GRAY) AND INCLUDE A HINGED COVER, DESIGNED TO SWING OPEN DOWNWARD; SHALL BE PANDUIT TYPE E (OR EQUAL); AND RATED NEMA 1 (OR BETTER) INDOORS, OR NEMA 3R (OR BETTER) OUTDOORS.
23. EQUIPMENT CABINETS, TERMINAL BOXES, JUNCTION BOXES, AND PULL BOXES SHALL BE GALVANIZED OR EPOXY-COATED SHEET STEEL, SHALL MEET OR EXCEED UL 50, AND RATED NEMA 1 (OR BETTER) INDOORS, OR NEMA 3R (OR BETTER) OUTDOORS
24. METAL RECEPTACLE, SWITCH, AND DEVICE BOXES SHALL BE GALVANIZED, EPOXY-COATED, OR NON-CORRODING; SHALL MEET OR EXCEED UL 514A AND NEMA OS 1; AND RATED NEMA 1 (OR BETTER) INDOORS, OR WEATHER PROTECTED (WP OR BETTER) OUTDOORS.
25. NON-METALLIC RECEPTACLE, SWITCH, AND DEVICE BOXES SHALL MEET OR EXCEED NEMA OS 2; AND RATED NEMA 1 (OR BETTER) INDOORS, OR WEATHER PROTECTED (WP OR BETTER) OUTDOORS.
26. CONTRACTOR SHALL APPLY FOR ELECTRICAL SERVICE AS SOON AS POSSIBLE AND COORDINATE REQUIREMENTS, SERVICE ROUTING, AND METER SOCKET TYPE WITH LOCAL POWER COMPANY.
27. CONTRACTOR SHALL APPLY FOR TELEPHONE SERVICE AS SOON AS POSSIBLE AND COORDINATE REQUIREMENTS AND SERVICE ROUTING WITH TELEPHONE COMPANY.
28. CONTRACTOR SHALL OBTAIN ALL PERMITS, PAY PERMIT FEES, AND SCHEDULE INSPECTIONS.
29. CONTRACTOR SHALL LABEL ELECTRICAL EQUIPMENT IN ACCORDANCE WITH NEC 110.16 AND 110.24.
30. CONTRACTOR SHALL VERIFY THAT THE MAIN BONDING JUMPER AND GROUNDING ELECTRODE CONDUCTOR IS INSTALLED PROPERLY AT SERVICE ENTRANCE.
31. CONTRACTOR SHALL SEAL AROUND ALL CONDUIT PENETRATIONS THROUGH WALLS, FLOORS AND ROOFS TO PREVENT MOISTURE PENETRATION OR VERMIN INFESTATIONS.
32. WHERE ELECTRICAL POWER IS TO BE SUB-FED FROM AN EXISTING DISTRIBUTION SYSTEM, THE FOLLOWING SHALL APPLY:
    A. CONTRACTOR SHALL PERFORM LOAD TESTING TO DETERMINE MAXIMUM FEEDER DEMAND PER N.E.C. ARTICLE 220.
    B. CONTRACTOR SHALL VERIFY WHETHER EXISTING FEEDER CAPACITY EXCEEDS VALUE CALCULATED PER N.E.C. ARTICLE 220.
    C. EACH BRANCH CIRCUIT PROTECTIVE DEVICE SHALL HAVE SAME INTERRUPTING RATING AS EQUIPMENT SUPPLYING IT.
    D. PREFERRED MEANS OF SUPPLY SHALL BE A BRANCH CIRCUIT PROTECTIVE DEVICE LOCATED IN EXISTING PANEL.
36. DURING TRENCH BACK-FILLING FOR EACH UNDERGROUND ELECTRICAL, TELEPHONE, SIGNAL AND COMMUNICATIONS LINE, PROVIDE A CONTINUOUS UNDERGROUND WARNING TAPE TWELVE INCHES BELOW FINISHED GRADE.

GROUNDING NOTES

GROUND TESTING AFTER CONSTRUCTION

1. AFTER COMPLETION OF CONSTRUCTION OF THE CELL SITE GROUND SYSTEM, A POST INSTALLATION GROUND TEST SHALL BE PERFORMED BY THE CONTRACTOR. THE CONTRACTOR SHALL DETERMINE THE GROUND RESISTANCE FOR ALL SITES AFTER INSTALLATION OF THE EARTH GROUND SYSTEM. A PRELIMINARY EARTH RESISTIVITY TEST (3 POLE TEST OR CLAMP-ON-METER) SHALL BE PERFORMED PRIOR TO BACK FILLING ALL TRENCHES AS SPECIFIED IN T-MOBILE NETWORK STANDARDS (NSTD46) AND THE NATIONAL ELECTRIC CODE.
2. APPROVED MEASUREMENT METHODS FOR POST INSTALLATION GROUND TESTING SHALL BE ONE OF THE FOLLOWING METHODS:
    A. FALL OF POTENTIAL METHOD – 3 POINT
    B. CLAMP-ON RESISTANCE TEST
    C. TOWER AND EXTERNAL CONDUCTOR TEST
3. A GROUNDING RESISTANCE TEST REPORT SHALL BE PREPARED UPON COMPLETION OF THE TESTING. THE TEST REPORT SHALL SHOW THE RESISTANCE IN OHMS AT 40%, 52%, 62%, 72% AND 82% POINTS IN 10% INTERVALS. RESISTANCE IS TO BE RECORDED AT EACH INTERVAL FOR EACH POINT FOR FOUR (4) DIFFERENT DIRECTIONS UNTIL THERE IS A PLATEAU SEEN AT THE 62% POINT. TESTING SHOULD BE COMPLETED IN A MINIMUM OF TWO (2) DIFFERENT DIRECTIONS AT 90 DEGREES APART. RECORD THE AVERAGE OR MEAN AS THE RESISTANCE OF THE SITE AND ENTER THIS ON THE POST RESISTANCE DATA CHART.
4. PROVIDE THE POST INSTALLATION – GROUND RESISTANCE TEST REPORT TO THE REGIONAL PROJECT ENGINEER ACCOMPANIED BY THE POST RESISTANCE DATE CHART.

ANTENNA MOUNTING NOTES

1. THE DESIGN AND CONSTRUCTION OF ANTENNA SUPPORTS SHALL CONFORM TO ANSI/TIA-222 H-2017 "STRUCTURAL STANDARD FOR ANTENNA SUPPORTING STRUCTURES, ANTENNAS AND SMALL WIND TURBINE SUPPORT STRUCTURES," THE BUILDING CODE OF NEW YORK STATE, AND ALL OTHER APPLICABLE LOCAL, STATE, AND FEDERAL CODES.
2. ALL STEEL MATERIALS SHALL BE GALVANIZED AFTER FABRICATION IN ACCORDANCE WITH ASTM A123 "ZINC (HOT-DIP GALVANIZED) COATINGS ON IRON AND STEEL PRODUCTS", UNLESS OTHERWISE NOTED.
3. ALL BOLTS, ANCHORS AND MISCELLANEOUS HARDWARE SHALL BE GALVANIZED IN ACCORDANCE WITH ASTM A153 "ZINC-COATING (HOT-DIP) ON IRON AND STEEL HARDWARE", UNLESS OTHERWISE NOTED.
4. DAMAGED GALVANIZED SURFACES SHALL BE REPAIRED BY COLD GALVANIZING IN ACCORDANCE WITH ASTM A780 "REPAIR OF DAMAGED AND UNCOATED AREAS OF HOT-DIP GALVANIZED COATINGS", USING COLD GALVANIZING COMPOUND AS MANUFACTURED BY ZINGA-USA OR ZINC KOTE, OR ENGINEER APPROVED EQUAL WITH A MINIMUM METALLIC ZINC CONTENT OF 95% BY WEIGHT IN DRY FILM. DRY FINISHED COATING THICKNESS SHALL BE 3 MILS MINIMUM.
5. ALL ANTENNA MOUNTS SHALL BE INSTALLED WITH DOUBLE NUTS AND SHALL BE INSTALLED IN ACCORDANCE WITH MANUFACTURER'S SPECIFICATIONS.
6. DESIGN OF THE ANTENNA MOUNTING BRACKETS, SUPPORTS, AND ALL COMPONENTS THEREOF AND ATTACHMENT THERETO SHALL BE THE RESPONSIBILITY OF THE MANUFACTURER. MANUFACTURER SHALL PROVIDE THE OWNER DRAWINGS DETAILING ALL COMPONENTS OF THE ASSEMBLY, INCLUDING CONNECTIONS, DESIGN LOADS, AND ALL OTHER PERTINENT DATA. MANUFACTURER SHALL ALSO PROVIDE THE OWNER WITH A STATEMENT OF COMPLIANCE, INDICATING THAT THE ANTENNA SUPPORTS HAVE BEEN DESIGNED IN ACCORDANCE WITH ANSI/TIA-222-H-2017 STANDARDS. ALL SUBMISSIONS SHALL BEAR THE SIGNATURE AND SEAL OF A PROFESSIONAL ENGINEER LICENSED IN THE STATE OF NEW YORK.

CONFIGURATION

67D5A997DB 6160

REFER TO LATEST T-MOBILE RF DATA SHEET FOR FINAL RF DESIGN & BOM

PYRAMID Network Services, LLC

Sprint Now part of T-Mobile

103 MONARCH DRIVE
LIVERPOOL, NY 13088

Tectonic
PRACTICAL SOLUTIONS. EXCEPTIONAL SERVICE.
Tectonic Engineering Consultants, Geologists & Land Surveyors, D.P.C.
70 Pleasant Hill Road
P.O. Box 37
Mountainville, NY 10953
Phone: (845) 534-5959
(800) 829-6531
www.tectonicengineering.com
Project Contact Info
36 British American Blvd.
Suite 101
Latham, NY 12110
Phone: (518) 783-1630

WORK ORDER NUMBER	DRAWN BY
10666.023	DAI

NO.	DATE	ISSUE
0	02/18/21	FOR COMMENT
1	05/06/21	FOR COMMENT
2	06/14/21	PER COMMENTS
3	07/15/21	FOR ZONING

RELEASED BY	DATE

STATE OF NEW YORK · ADRIAN HOWARD MASBIE · 101061 · LICENSED PROFESSIONAL ENGINEER

7/15/21

UNAUTHORIZED ALTERATION OR ADDITIONS TO A PLAN BEARING THE SEAL OF A LICENSED ENGINEER OR LAND SURVEYOR IS A VIOLATION OF SECTION 7209 SUBDIVISION 2 OF THE NEW YORK STATE EDUCATION LAW.

COPIES OF THIS DOCUMENT WITHOUT A FACSIMILE OF THE SIGNATURE AND AN ORIGINAL EMBOSSED SEAL OR ORIGINAL STAMP IN BLUE OR RED INK OF THE PROFESSIONAL ENGINEER OR LAND SURVEYOR SHALL NOT BE CONSIDERED VALID COPIES.

0 1 2 3
ORIGINAL SIZE IN INCHES

SITE INFORMATION

UP40156A
FORMER FIRST NATIONAL BANK
AL53XC833

SITE ADDRESS

29 EAST MAIN ST
CITY OF AMSTERDAM
MONTGOMERY COUNTY
NY 12010

SHEET TITLE

NOTES

SHEET NUMBER

GN-1

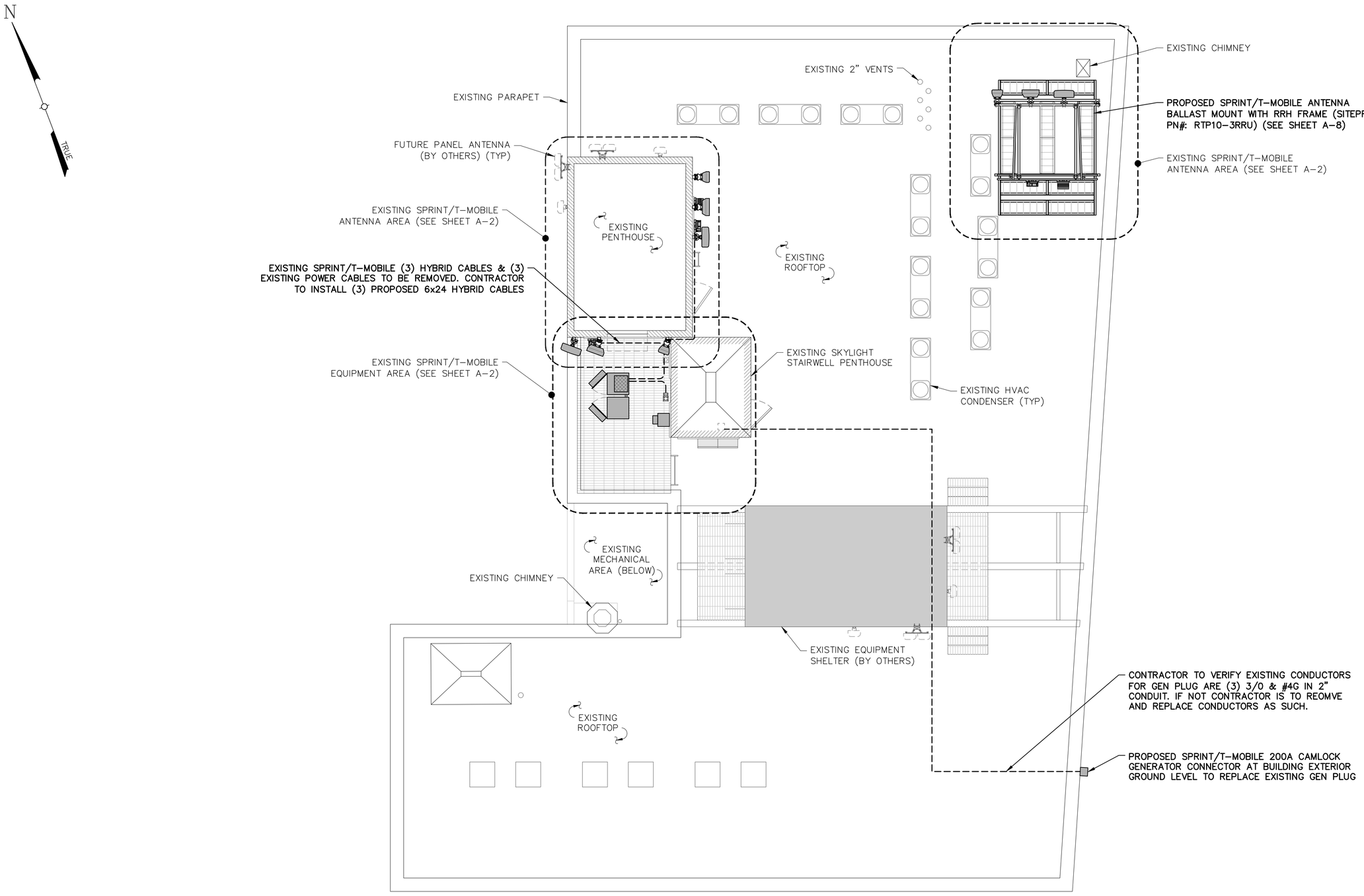

NOTE:

SITE INFORMATION BASED ON DRAWINGS DATED 07/19/18 BY RAMAKER & ASSOCIATES. AND A SITE INSPECTION ON 01/26/21 BY TECTONIC ENGINEERING CONSULTANTS, GEOLOGISTS & LAND SURVEYORS, D.P.C.

1 / A-1 OVERALL SITE PLAN

SCALE: 1" = 5' (22x34 SIZE)
1" = 10' (11x17 SIZE)

CONFIGURATION
67D5A997DB 6160
REFER TO LATEST T-MOBILE RF DATA SHEET FOR FINAL RF DESIGN & BOM

PYRAMID Network Services, LLC

Sprint Now part of T-Mobile

103 MONARCH DRIVE
LIVERPOOL, NY 13088

Tectonic
PRACTICAL SOLUTIONS. EXCEPTIONAL SERVICE.
Tectonic Engineering Consultants, Geologists & Land Surveyors, D.P.C.
70 Pleasant Hill Road
P.O. Box 37
Mountainville, NY 10953
Phone: (845) 534-5959
(800) 829-6531
www.tectonicengineering.com
Project Contact Info
36 British American Blvd.
Suite 101
Latham, NY 12110
Phone: (518) 783-1630

WORK ORDER NUMBER	DRAWN BY
10666.023	DAI

NO.	DATE	ISSUE
0	02/18/21	FOR COMMENT
1	05/06/21	FOR COMMENT
2	06/14/21	PER COMMENTS
3	07/15/21	FOR ZONING

RELEASED BY	DATE

STATE OF NEW YORK · ADRIAN HOWARD MASBE · 101061 · LICENSED PROFESSIONAL ENGINEER
7/15/21

UNAUTHORIZED ALTERATION OR ADDITIONS TO A PLAN BEARING THE SEAL OF A LICENSED ENGINEER OR LAND SURVEYOR IS A VIOLATION OF SECTION 7209 SUBDIVISION 2 OF THE NEW YORK STATE EDUCATION LAW.

COPIES OF THIS DOCUMENT WITHOUT A FACSIMILE OF THE SIGNATURE AND AN ORIGINAL EMBOSSED SEAL OR ORIGINAL STAMP IN BLUE OR RED INK OF THE PROFESSIONAL ENGINEER OR LAND SURVEYOR SHALL NOT BE CONSIDERED VALID COPIES.

0 1 2 3
ORIGINAL SIZE IN INCHES

SITE INFORMATION

UP40156A
FORMER FIRST NATIONAL BANK
AL53XC833

SITE ADDRESS

29 EAST MAIN ST
CITY OF AMSTERDAM
MONTGOMERY COUNTY
NY 12010

SHEET TITLE

OVERALL SITE PLAN

SHEET NUMBER

A-1

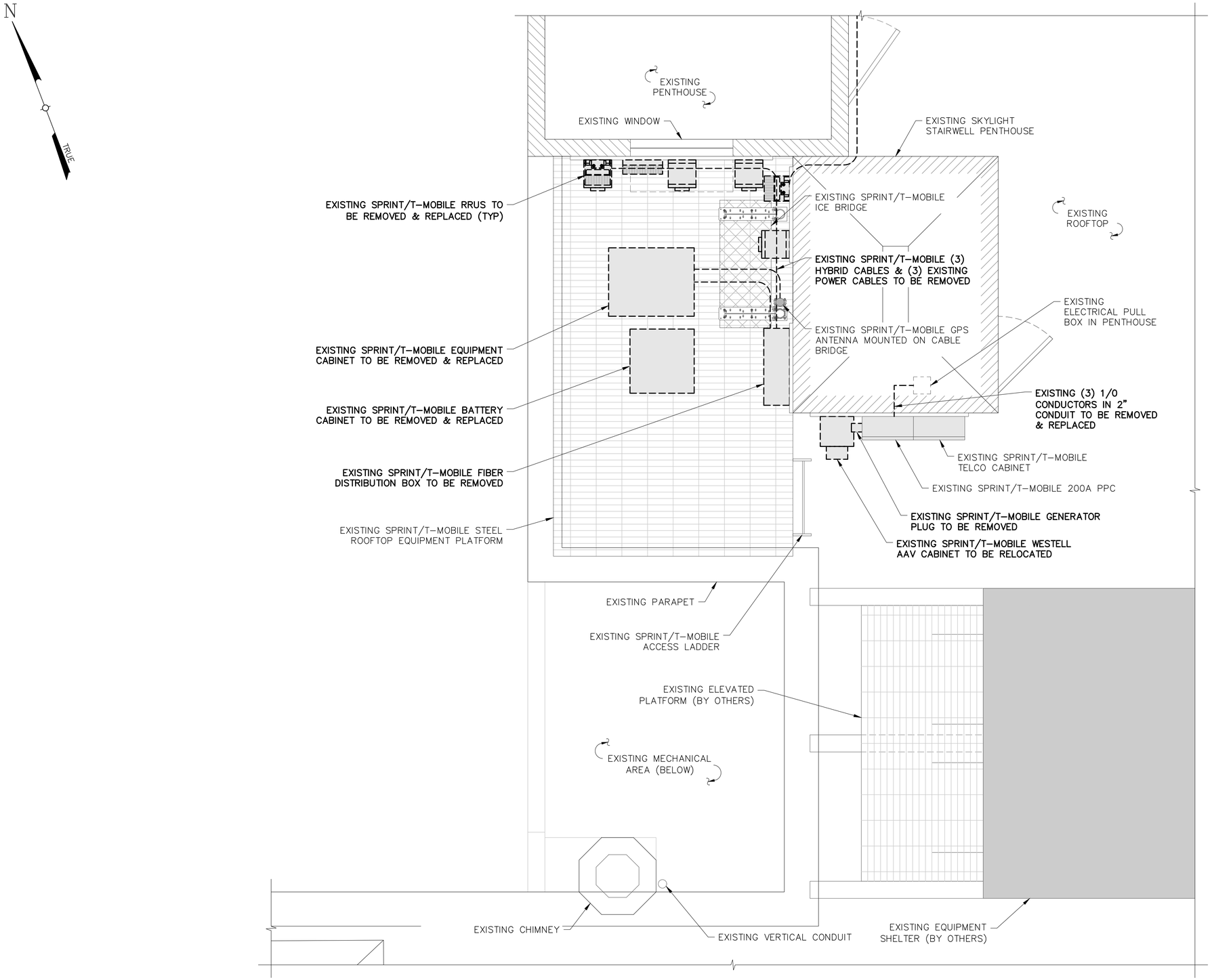

1 A-2A EXISTING EQUIPMENT LAYOUT PLAN

SCALE: 1/2" = 1'-0" (22x34 SIZE)
1/4" = 1'-0" (11x17 SIZE)

CONFIGURATION
67D5A997DB 6160
REFER TO LATEST T-MOBILE RF DATA SHEET FOR FINAL RF DESIGN & BOM

PYRAMID Network Services, LLC

Sprint Now part of T-Mobile

103 MONARCH DRIVE
LIVERPOOL, NY 13088

Tectonic
PRACTICAL SOLUTIONS. EXCEPTIONAL SERVICE.
Tectonic Engineering Consultants, Geologists & Land Surveyors, D.P.C.
70 Pleasant Hill Road
P.O. Box 37
Mountainville, NY 10953
Phone: (845) 534-5959
(800) 829-6531
www.tectonicengineering.com
Project Contact Info
38 British American Blvd.
Suite 101
Latham, NY 12110
Phone: (518) 783-1630

WORK ORDER NUMBER	DRAWN BY
10666.023	DAI

NO.	DATE	ISSUE
0	02/18/21	FOR COMMENT
1	05/06/21	FOR COMMENT
2	06/14/21	PER COMMENTS
3	07/15/21	FOR ZONING

RELEASED BY	DATE

STATE OF NEW YORK
ADRIAN HOWARD MAGBIE
101061
LICENSED PROFESSIONAL ENGINEER
7/15/21

UNAUTHORIZED ALTERATION OR ADDITIONS TO A PLAN BEARING THE SEAL OF A LICENSED ENGINEER OR LAND SURVEYOR IS A VIOLATION OF SECTION 7209 SUBDIVISION 2 OF THE NEW YORK STATE EDUCATION LAW.

COPIES OF THIS DOCUMENT WITHOUT A FACSIMILE OF THE SIGNATURE AND AN ORIGINAL EMBOSSED SEAL OR ORIGINAL STAMP IN BLUE OR RED INK OF THE PROFESSIONAL ENGINEER OR LAND SURVEYOR SHALL NOT BE CONSIDERED VALID COPIES.

0 1 2 3
ORIGINAL SIZE IN INCHES

SITE INFORMATION

UP40156A
FORMER FIRST NATIONAL BANK
AL53XC833

SITE ADDRESS

29 EAST MAIN ST
CITY OF AMSTERDAM
MONTGOMERY COUNTY
NY 12010

SHEET TITLE

EXISTING EQUIPMENT LAYOUT PLAN

SHEET NUMBER

A-2A

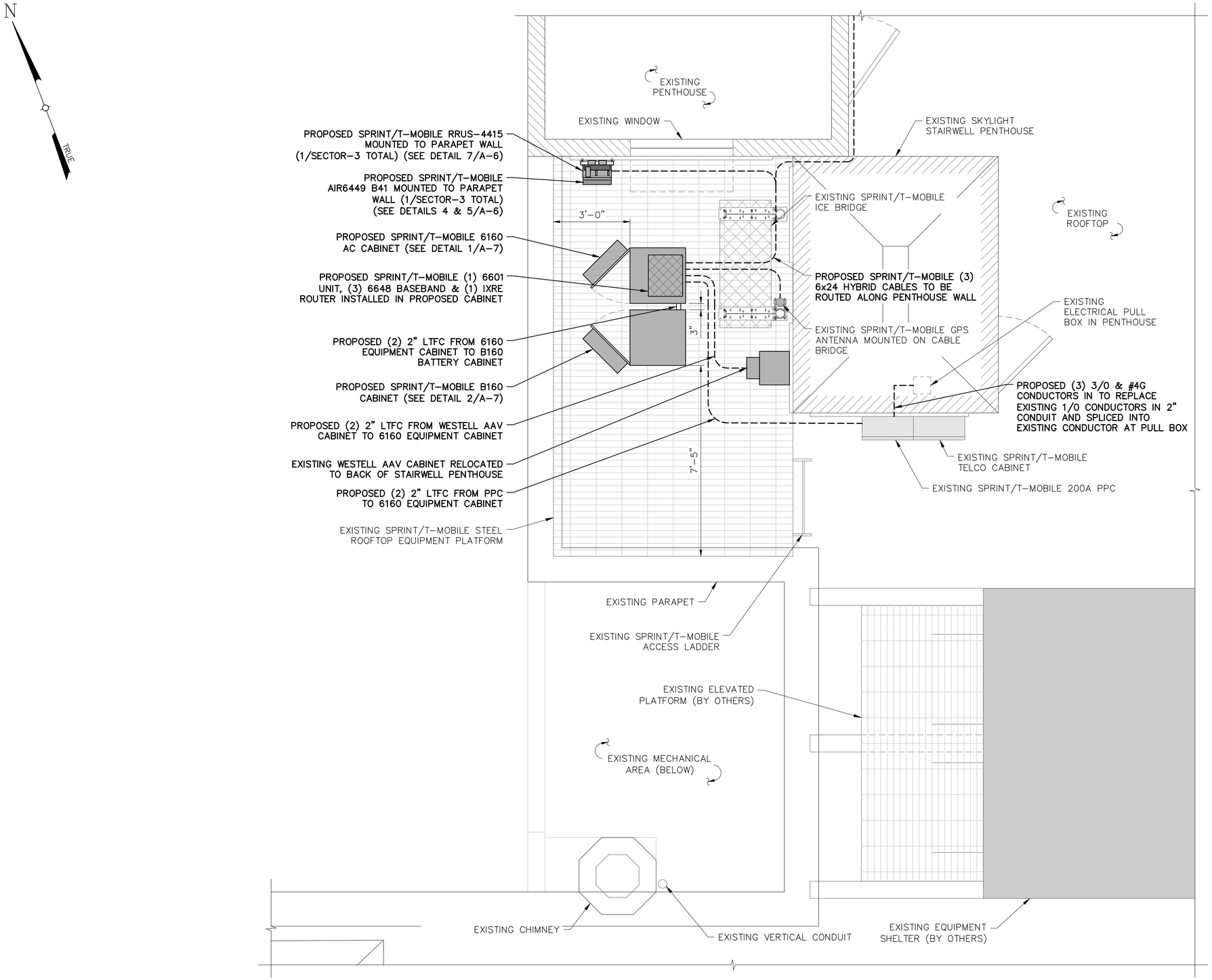

1 A-2B PROPOSED EQUIPMENT LAYOUT PLAN

SCALE: 1/2" = 1'-0" (22x34 SIZE)
1/4" = 1'-0" (11x17 SIZE)

CONFIGURATION
67D5A997DB 6160
REFER TO LATEST T-MOBILE RF DATA SHEET FOR FINAL RF DESIGN & BOM

PYRAMID Network Services, LLC

Sprint Now part of T-Mobile

103 MONARCH DRIVE
LIVERPOOL, NY 13088

Tectonic
PRACTICAL SOLUTIONS. EXCEPTIONAL SERVICE.
Tectonic Engineering Consultants, Geologists & Land Surveyors, D.P.C.
70 Pleasant Hill Road
P.O. Box 37
Mountainville, NY 10953
Phone: (845) 534-5959
(800) 829-6531
www.tectonicengineering.com
Project Contact Info
38 British American Blvd.
Suite 101
Latham, NY 12110
Phone: (518) 783-1630

WORK ORDER NUMBER	DRAWN BY
10666.023	DAI

NO.	DATE	ISSUE
0	02/18/21	FOR COMMENT
1	05/06/21	FOR COMMENT
2	06/14/21	PER COMMENTS
3	07/15/21	FOR ZONING

RELEASED BY	DATE

STATE OF NEW YORK
ADRIAN HOWARD MASBE
101061
LICENSED PROFESSIONAL ENGINEER
7/15/21

UNAUTHORIZED ALTERATION OR ADDITIONS TO A PLAN BEARING THE SEAL OF A LICENSED ENGINEER OR LAND SURVEYOR IS A VIOLATION OF SECTION 7209 SUBDIVISION 2 OF THE NEW YORK STATE EDUCATION LAW.

COPIES OF THIS DOCUMENT WITHOUT A FACSIMILE OF THE SIGNATURE AND AN ORIGINAL EMBOSSED SEAL OR ORIGINAL STAMP IN BLUE OR RED INK OF THE PROFESSIONAL ENGINEER OR LAND SURVEYOR SHALL NOT BE CONSIDERED VALID COPIES.

0 1 2 3
ORIGINAL SIZE IN INCHES

SITE INFORMATION

UP40156A
FORMER FIRST NATIONAL BANK
AL53XC833

SITE ADDRESS

29 EAST MAIN ST
CITY OF AMSTERDAM
MONTGOMERY COUNTY
NY 12010

SHEET TITLE

PROPOSED EQUIPMENT LAYOUT PLAN

SHEET NUMBER

A-2B

NOTE:
CONTRACTOR TO PAINT PROPOSED ANTENNAS AND MOUNTS TO MATCH EXISTING.

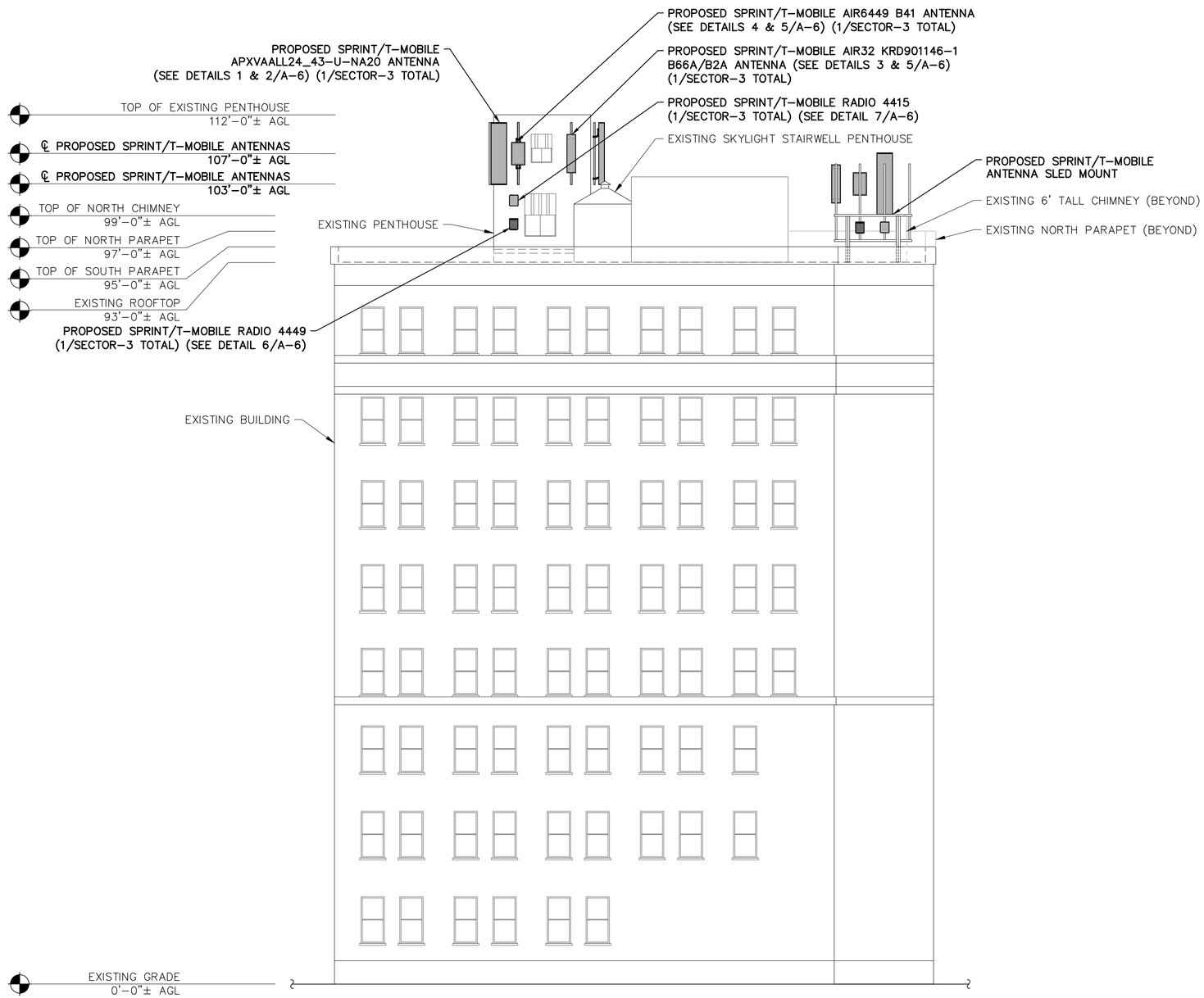

1 / A-3 SOUTH ELEVATION
SCALE: 1" = 10' (22x34 SIZE)
1" = 20' (11x17 SIZE)

CONFIGURATION
67D5A997DB 6160
REFER TO LATEST T-MOBILE RF DATA SHEET FOR FINAL RF DESIGN & BOM

PYRAMID Network Services, LLC

Sprint Now part of T-Mobile

103 MONARCH DRIVE
LIVERPOOL, NY 13088

Tectonic
PRACTICAL SOLUTIONS. EXCEPTIONAL SERVICE.
Tectonic Engineering Consultants, Geologists & Land Surveyors, D.P.C.
70 Pleasant Hill Road
P.O. Box 37
Mountainville, NY 10953
Phone: (845) 534-5959
(800) 829-6531
www.tectonicengineering.com
Project Contact Info
36 British American Blvd.
Suite 101
Latham, NY 12110
Phone: (518) 783-1630

WORK ORDER NUMBER	DRAWN BY
10666.023	DAI

NO.	DATE	ISSUE
0	02/18/21	FOR COMMENT
1	05/06/21	FOR COMMENT
2	06/14/21	PER COMMENTS
3	07/15/21	FOR ZONING

RELEASED BY	DATE

STATE OF NEW YORK · ADRIAN HOWARD MASSIE · 101061 · LICENSED PROFESSIONAL ENGINEER
7/15/21

UNAUTHORIZED ALTERATION OR ADDITIONS TO A PLAN BEARING THE SEAL OF A LICENSED ENGINEER OR LAND SURVEYOR IS A VIOLATION OF SECTION 7209 SUBDIVISION 2 OF THE NEW YORK STATE EDUCATION LAW.

COPIES OF THIS DOCUMENT WITHOUT A FACSIMILE OF THE SIGNATURE AND AN ORIGINAL EMBOSSED SEAL OR ORIGINAL STAMP IN BLUE OR RED INK OF THE PROFESSIONAL ENGINEER OR LAND SURVEYOR SHALL NOT BE CONSIDERED VALID COPIES.

0 1 2 3
ORIGINAL SIZE IN INCHES

SITE INFORMATION
UP40156A
FORMER FIRST NATIONAL BANK
AL53XC833

SITE ADDRESS
29 EAST MAIN ST
CITY OF AMSTERDAM
MONTGOMERY COUNTY
NY 12010

SHEET TITLE
ELEVATION

SHEET NUMBER
A-3

NORTH NOTE: NORTH SHOWN HAS BEEN ESTABLISHED USING THE USGS QUADRANGLE 7.5 MINUTE MAPS AND IS APPROXIMATE. VERIFY TRUE NORTH PRIOR TO INSTALLATION OF ANTENNAS.

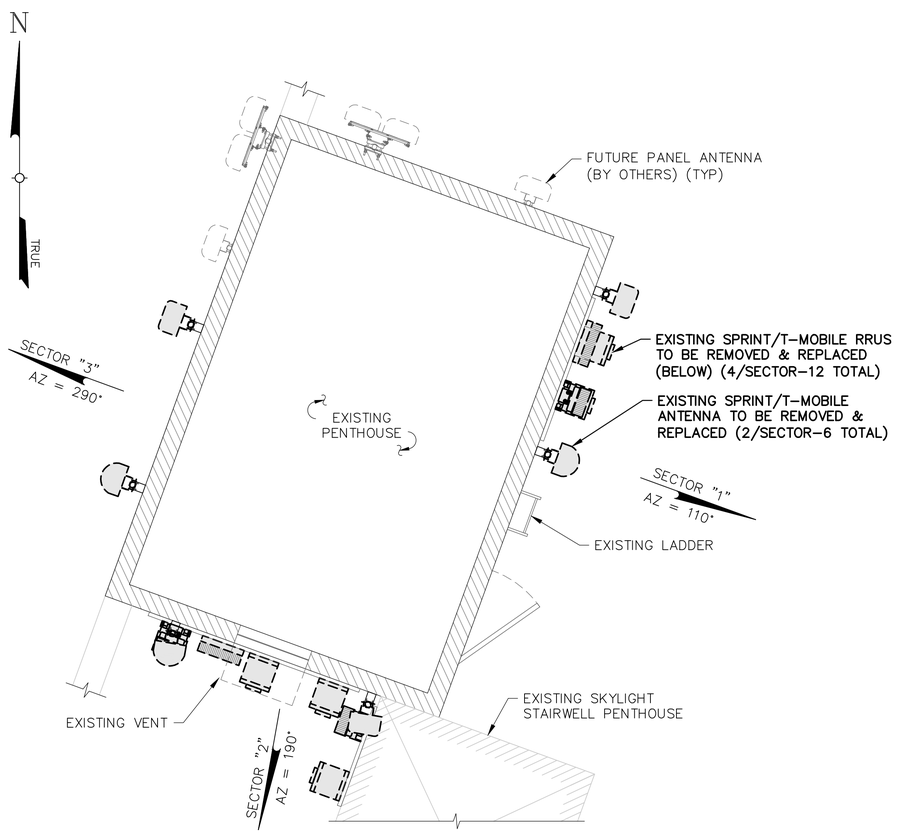

2 A-4 EXISTING ANTENNA PLAN

SCALE: 3/8" = 1'-0" (22x34 SIZE)
3/16" = 1'-0" (11x17 SIZE)

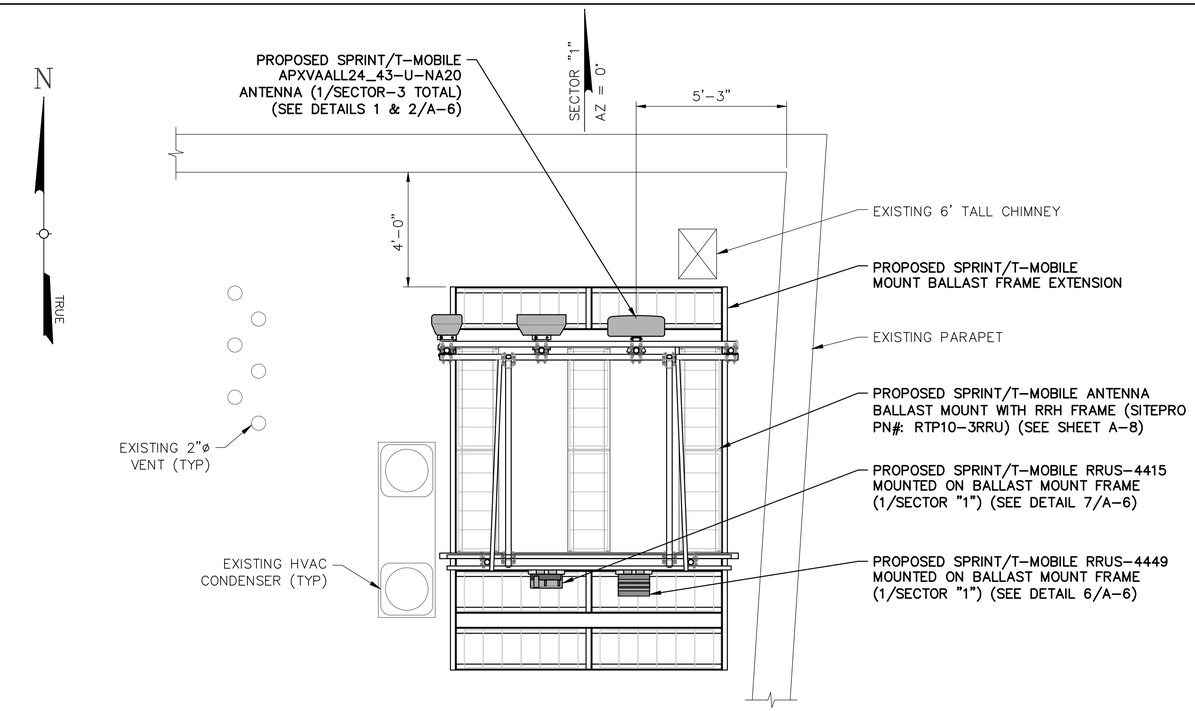

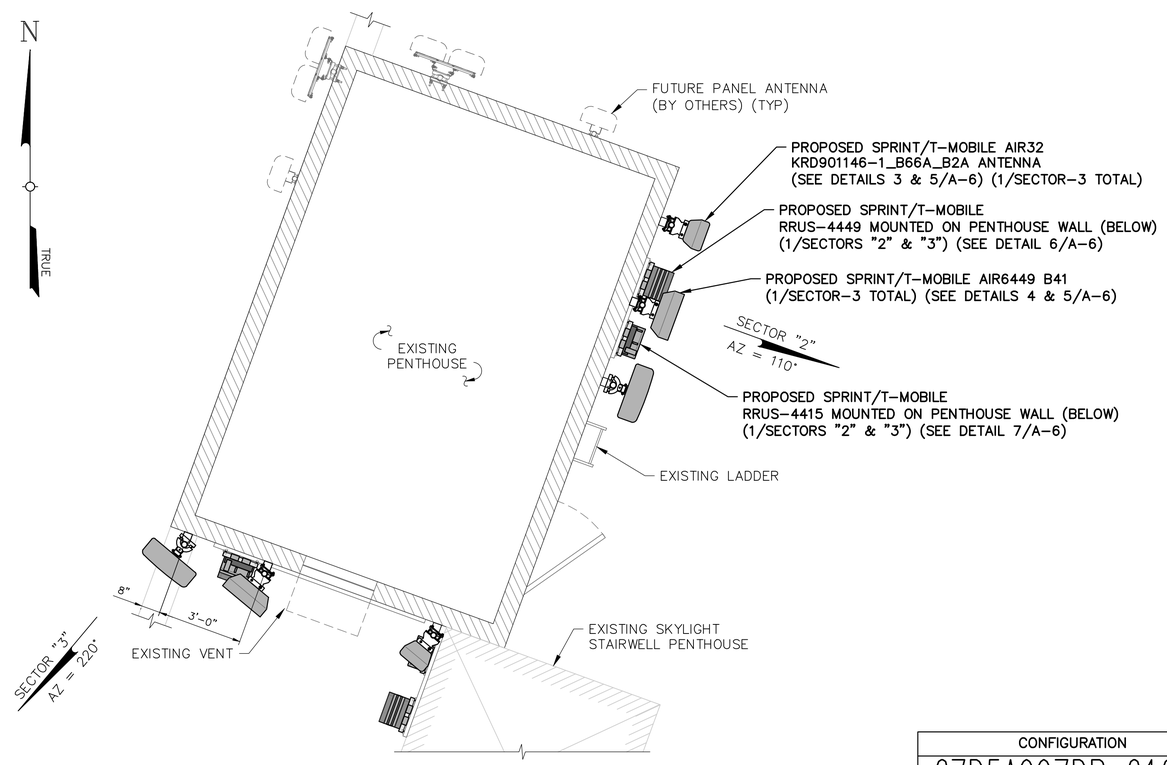

3 A-4 PROPOSED ANTENNA PLAN

SCALE: 3/8" = 1'-0" (22x34 SIZE)
3/16" = 1'-0" (11x17 SIZE)

CONFIGURATION
67D5A997DB 6160
REFER TO LATEST T-MOBILE RF DATA SHEET FOR FINAL RF DESIGN & BOM

PYRAMID Network Services, LLC

Sprint Now part of T-Mobile

103 MONARCH DRIVE
LIVERPOOL, NY 13088

Tectonic
PRACTICAL SOLUTIONS. EXCEPTIONAL SERVICE.
Tectonic Engineering Consultants, Geologists & Land Surveyors, D.P.C.
70 Pleasant Hill Road
P.O. Box 37
Mountainville, NY 10953
Phone: (845) 534-5959
(800) 829-6531
www.tectonicengineering.com
Project Contact Info
38 British American Blvd.
Suite 101
Latham, NY 12110
Phone: (518) 783-1630

WORK ORDER NUMBER	DRAWN BY
10666.023	DAI

NO.	DATE	ISSUE
0	02/18/21	FOR COMMENT
1	05/06/21	FOR COMMENT
2	06/14/21	PER COMMENTS
3	07/15/21	FOR ZONING

RELEASED BY	DATE

STATE OF NEW YORK · ADRIAN HOWARD MASSIE · 101061 · LICENSED PROFESSIONAL ENGINEER
7/15/21

UNAUTHORIZED ALTERATION OR ADDITIONS TO A PLAN BEARING THE SEAL OF A LICENSED ENGINEER OR LAND SURVEYOR IS A VIOLATION OF SECTION 7209 SUBDIVISION 2 OF THE NEW YORK STATE EDUCATION LAW.

COPIES OF THIS DOCUMENT WITHOUT A FACSIMILE OF THE SIGNATURE AND AN ORIGINAL EMBOSSED SEAL OR ORIGINAL STAMP IN BLUE OR RED INK OF THE PROFESSIONAL ENGINEER OR LAND SURVEYOR SHALL NOT BE CONSIDERED VALID COPIES.

0 1 2 3
ORIGINAL SIZE IN INCHES

SITE INFORMATION

UP40156A
FORMER FIRST NATIONAL BANK
AL53XC833

SITE ADDRESS

29 EAST MAIN ST
CITY OF AMSTERDAM
MONTGOMERY COUNTY
NY 12010

SHEET TITLE

ANTENNA PLANS
PLANS

SHEET NUMBER

A-4

ANTENNA AND CABLE SCHEDULE

SECTOR MARK	SECTOR	STATUS	ANTENNA DATA	MECH DOWN TILT	ELECTRICAL DOWN TILT	AZIMUTH (TRUE NORTH)	ANTENNA ℄ HEIGHT (AGL)	TMA/RRU	CABLE	JUMPER TYPE	CABLE LENGTH
1–1	"1" FAR–LEFT	PROPOSED	ERICSSON AIR32 KRD901146–1 B66A/B2A 56.6" x 12.9" x 8.7", 132.2 LBS	0°	2°,2°,2°,2°	0°	103'	0/0	PROPOSED SHARED 6x24 4AWG HYBRID FIBER TRUNK	DC FIBER	30'±
1–2	"1" MIDDLE	PROPOSED	ERICSSON AIR6449 B41 33.1" x 20.6" x 8.6", 104 LBS	0°	2°,2°	0°	103'	0/0	SHARED 6x24 4AWG HYBRID TRUNK	DC FIBER	–
1–3	"1" FAR–RIGHT	PROPOSED	RFS APXVAALL24_43–U–NA20 95.9" x 24" x 8.5", 144.3 LBS	0°	4°,4°,2°,2°	0°	103'	0/2	PROPOSED JUMPERS FROM RRUS	DC FIBER	20'±/20'±
2–1	"2" FAR–LEFT	PROPOSED	ERICSSON AIR32 KRD901146–1 B66A/B2A 56.6" x 12.9" x 8.7", 132.2 LBS	0°	2°,2°,2°,2°	110°	107'	0/0	PROPOSED SHARED 6x24 4AWG HYBRID FIBER TRUNK	DC FIBER	10'±
2–2	"2" MIDDLE	PROPOSED	ERICSSON AIR6449 B41 33.1" x 20.6" x 8.6", 104 LBS	0°	2°,2°	110°	107'	0/0	SHARED 6x24 4AWG HYBRID TRUNK	DC FIBER	–
2–3	"2" FAR–RIGHT	PROPOSED	RFS APXVAALL24_43–U–NA20 95.9" x 24" x 8.5", 144.3 LBS	0°	4°,4°,2°,2°	110°	107'	0/2	PROPOSED JUMPERS FROM RRUS	DC FIBER	20'±/20'±
3–1	"3" FAR–LEFT	PROPOSED	ERICSSON AIR32 KRD901146–1 B66A/B2A 56.6" x 12.9" x 8.7", 132.2 LBS	0°	2°,2°,2°,2°	220°	107'	0/0	PROPOSED SHARED 6x24 4AWG HYBRID FIBER TRUNK	DC FIBER	20'±
3–2	"3" MIDDLE	PROPOSED	ERICSSON AIR6449 B41 33.1" x 20.6" x 8.6", 104 LBS	0°	2°,2°	220°	107'	0/0	SHARED 6x24 4AWG HYBRID TRUNK	DC FIBER	–
3–3	"3" FAR–RIGHT	PROPOSED	RFS APXVAALL24_43–U–NA20 95.9" x 24" x 8.5", 144.3 LBS	0°	4°,4°,2°,2°	220°	107'	0/2	PROPOSED JUMPERS FROM RRUS	DC FIBER	20'±/20'±

NOTE:
- INFORMATION BASED ON T–MOBILE RFDS VERSION R2, DATED 03/23/21.

ANTENNA/RRH AND HYBRID SCHEDULE

SECTOR	STATUS	UNITS	UNIT DATA	# OF UNITS	CABLE TYPE	# OF CABLES	CABLE LENGTH
1	PROPOSED	RRUS–4415	16.5" x 13.4" x 5.9", 46 LBS	1	PROPOSED 6x24 4AWG HYBRID TRUNK	1	30'±
1	PROPOSED	RRUS 4449	14.95" x 13.19" x 9.25", 75 LBS	1	SHARED 6x24 4AWG HYBRID TRUNK	–	–
2	PROPOSED	RRUS–4415	16.5" x 13.4" x 5.9", 46 LBS	1	PROPOSED 6x24 4AWG HYBRID TRUNK	1	10'±
2	PROPOSED	RRUS 4449	14.95" x 13.19" x 9.25", 75 LBS	1	SHARED 6x24 4AWG HYBRID TRUNK	–	–
3	PROPOSED	RRUS–4415	16.5" x 13.4" x 5.9", 46 LBS	1	PROPOSED 6x24 4AWG HYBRID TRUNK	1	20'±
3	PROPOSED	RRUS 4449	14.95" x 13.19" x 9.25", 75 LBS	1	SHARED 6x24 4AWG HYBRID TRUNK	–	–

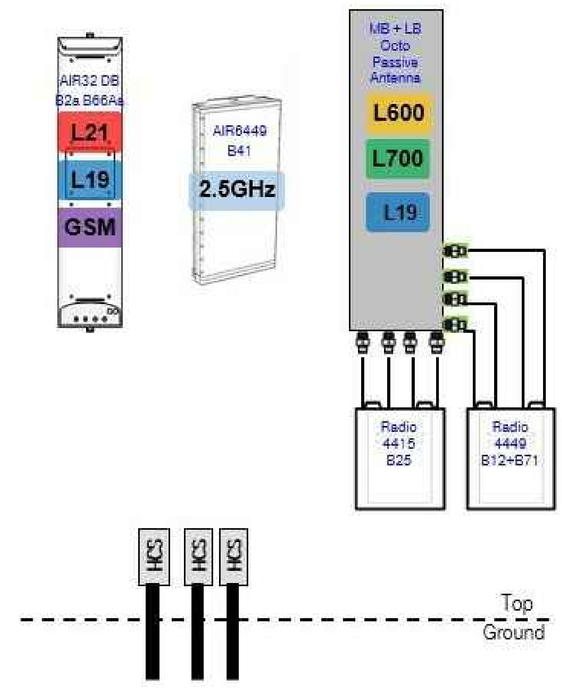

1 / A–5 PLUMBING DIAGRAM

SCALE: NTS (22x34 SIZE)
NTS (11x17 SIZE)

CONFIGURATION
67D5A997DB 6160
REFER TO LATEST T–MOBILE RF DATA SHEET FOR FINAL RF DESIGN & BOM

PYRAMID Network Services, LLC

Sprint Now part of T-Mobile

103 MONARCH DRIVE
LIVERPOOL, NY 13088

Tectonic
PRACTICAL SOLUTIONS. EXCEPTIONAL SERVICE.
Tectonic Engineering Consultants, Geologists & Land Surveyors, D.P.C.
70 Pleasant Hill Road
P.O. Box 37
Mountainville, NY 10953
Phone: (845) 534–5959
(800) 829–6531
www.tectonicengineering.com
Project Contact Info
38 British American Blvd.
Suite 101
Latham, NY 12110
Phone: (518) 783–1630

WORK ORDER NUMBER	DRAWN BY
10666.023	DAI

NO.	DATE	ISSUE
0	02/18/21	FOR COMMENT
1	05/06/21	FOR COMMENT
2	06/14/21	PER COMMENTS
3	07/15/21	FOR ZONING

RELEASED BY	DATE

STATE OF NEW YORK · ADRIAN HOWARD MASBE · 101061 · LICENSED PROFESSIONAL ENGINEER
7/15/21

UNAUTHORIZED ALTERATION OR ADDITIONS TO A PLAN BEARING THE SEAL OF A LICENSED ENGINEER OR LAND SURVEYOR IS A VIOLATION OF SECTION 7209 SUBDIVISION 2 OF THE NEW YORK STATE EDUCATION LAW.

COPIES OF THIS DOCUMENT WITHOUT A FACSIMILE OF THE SIGNATURE AND AN ORIGINAL EMBOSSED SEAL OR ORIGINAL STAMP IN BLUE OR RED INK OF THE PROFESSIONAL ENGINEER OR LAND SURVEYOR SHALL NOT BE CONSIDERED VALID COPIES.

0 1 2 3
ORIGINAL SIZE IN INCHES

SITE INFORMATION
UP40156A
FORMER FIRST NATIONAL BANK
AL53XC833

SITE ADDRESS
29 EAST MAIN ST
CITY OF AMSTERDAM
MONTGOMERY COUNTY
NY 12010

SHEET TITLE
ANTENNA &
HYBRID SCHEDULE

SHEET NUMBER
A–5

MANUFACTURER:		RFS
MODEL NO.:		APXVAALL24_43-U-NA20
DIMENSIONS		TOTAL WEIGHT:
A	95.9"	143.3 LBS
B	24"	
C	8.5"	

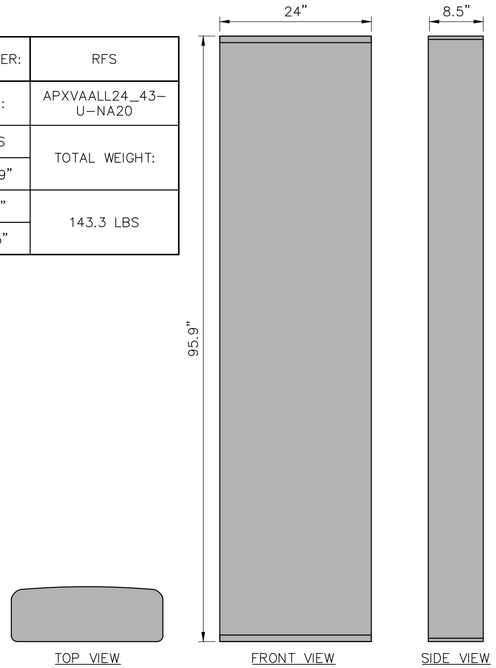

1 / A-6 ANTENNA DETAIL
SCALE: 1" = 1'-0" (22x34 SIZE)
2" = 1'-0" (11x17 SIZE)

MANUFACTURER:	RADIO FREQUENCY SYSTEMS
MODEL NO.:	APM40
TOTAL WEIGHT:	±25.3 LBS

MAXIMUM TORQUE	
M6	3.5 Nm (2.5 FT.LBS)
M12	40 Nm (29.5 FT.LBS)

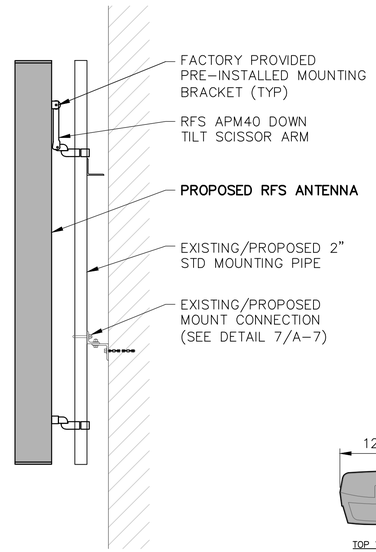

2 / A-6 MOUNTING DETAIL
SCALE: NTS

MANUFACTURER:		ERICSSON
MODEL NO.:		AIR32 B66A B2A
DIMENSIONS		TOTAL WEIGHT:
A	56.6"	132.2 LBS
B	12.9"	
C	8.7"	

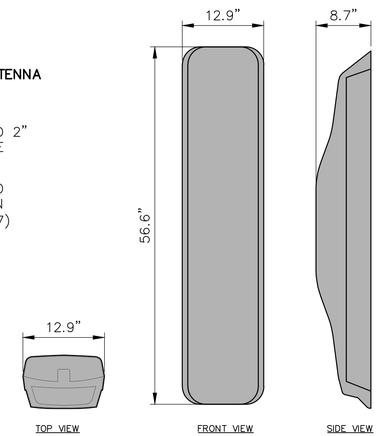

3 / A-6 ANTENNA DETAIL
SCALE: 1" = 1'-0" (22x34 SIZE)
2" = 1'-0" (11x17 SIZE)

MANUFACTURER:		ERICSSON
MODEL NO.:		AIR6449 B41
DIMENSIONS		TOTAL WEIGHT:
LENGTH	33.1"	104 LBS
WIDTH	20.6"	
HEIGHT	8.6"	

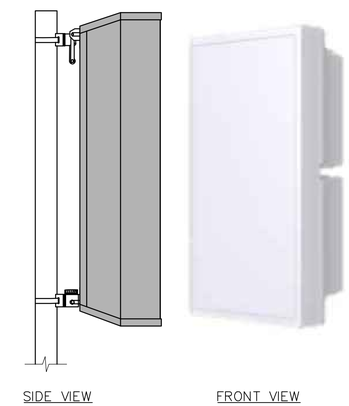

4 / A-6 ANTENNA DETAIL
SCALE: 1-1/2" = 1'-0" (22x34 SIZE)
2" = 1'-0" (11x17 SIZE)

MANUFACTURER:	ERICSSON
MODEL NO.:	85010070
SUITABLE MAST DIAMETER:	2.16"-4.53"
ANTENNA - MAST DISTANCE:	5.04"-5.2"
NUMBER OF PIECES:	2 CLAMPS
MATERIAL:	HOT DIPPED GALV. STAINLESS STEEL
TOTAL WEIGHT:	9.48 LBS

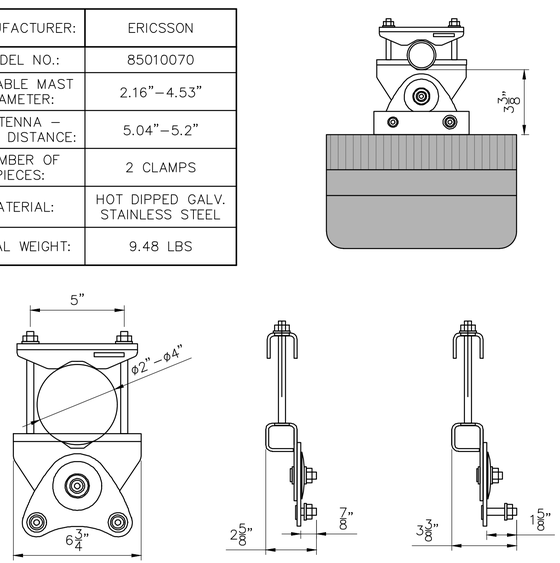

5 / A-6 ANTENNA MOUNTING DETAIL
SCALE: 3" = 1'-0" (22x34 SIZE)
6" = 1'-0" (11x17 SIZE)

MANUFACTURER:		ERICSSON
MODEL NO.:		RRUS 4449
DIMENSIONS		TOTAL WEIGHT:
A	14.95"	75 LBS
B	13.19"	
C	9.25"	

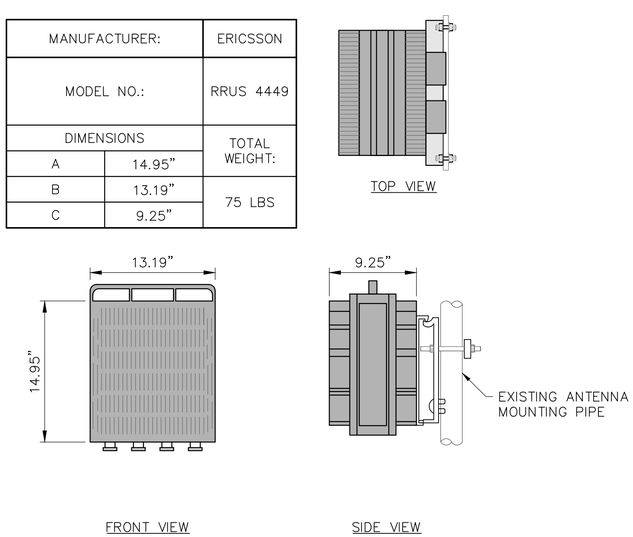

6 / A-6 RRUS-4449 DETAIL
SCALE: 1-1/2" = 1'-0" (22x34 SIZE)
3" = 1'-0" (11x17 SIZE)

MANUFACTURER:		ERICSSON
MODEL NO.:		RRUS-4415
DIMENSIONS		TOTAL WEIGHT:
A	16.5"	46 LBS
B	13.4"	
C	5.9"	

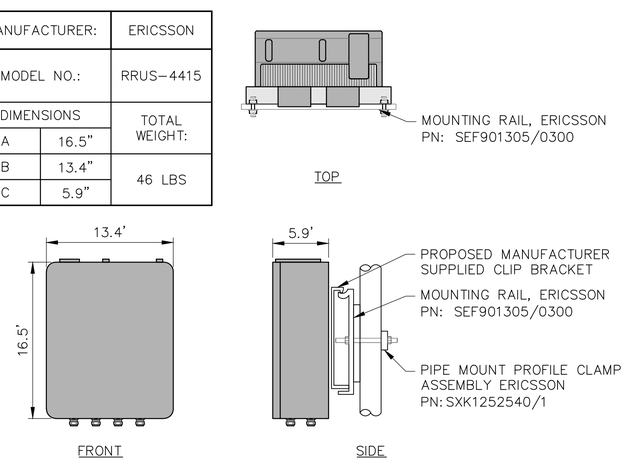

7 / A-6 RRUS-4415 DETAIL
SCALE: 1-1/2" = 1'-0" (22x34 SIZE)
3" = 1'-0" (11x17 SIZE)

CONFIGURATION
67D5A997DB 6160
REFER TO LATEST T-MOBILE RF DATA SHEET FOR FINAL RF DESIGN & BOM

PYRAMID Network Services, LLC

Sprint Now part of T-Mobile
103 MONARCH DRIVE
LIVERPOOL, NY 13088

Tectonic
PRACTICAL SOLUTIONS. EXCEPTIONAL SERVICE.
Tectonic Engineering Consultants, Geologists & Land Surveyors, D.P.C.
70 Pleasant Hill Road
P.O. Box 37
Mountainville, NY 10953
Phone: (845) 534-5959
(800) 829-6531
www.tectonicengineering.com
Project Contact Info
38 British American Blvd.
Suite 101
Latham, NY 12110
Phone: (518) 783-1630

WORK ORDER NUMBER	DRAWN BY
10666.023	DAI

NO.	DATE	ISSUE
0	02/18/21	FOR COMMENT
1	05/06/21	FOR COMMENT
2	06/14/21	PER COMMENTS
3	07/15/21	FOR ZONING

RELEASED BY	DATE

STATE OF NEW YORK · ADRIAN HOWARD MASSIE · 101061 · LICENSED PROFESSIONAL ENGINEER
7/15/21

UNAUTHORIZED ALTERATION OR ADDITIONS TO A PLAN BEARING THE SEAL OF A LICENSED ENGINEER OR LAND SURVEYOR IS A VIOLATION OF SECTION 7209 SUBDIVISION 2 OF THE NEW YORK STATE EDUCATION LAW.

COPIES OF THIS DOCUMENT WITHOUT A FACSIMILE OF THE SIGNATURE AND AN ORIGINAL EMBOSSED SEAL OR ORIGINAL STAMP IN BLUE OR RED INK OF THE PROFESSIONAL ENGINEER OR LAND SURVEYOR SHALL NOT BE CONSIDERED VALID COPIES.

0 1 2 3
ORIGINAL SIZE IN INCHES

SITE INFORMATION
UP40156A
FORMER FIRST NATIONAL BANK
AL53XC833

SITE ADDRESS
29 EAST MAIN ST
CITY OF AMSTERDAM
MONTGOMERY COUNTY
NY 12010

SHEET TITLE
DETAILS

SHEET NUMBER
A-6

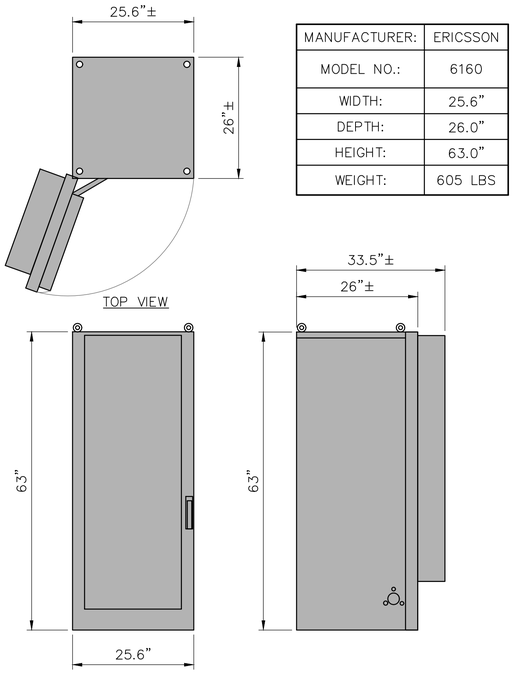

MANUFACTURER:	ERICSSON
MODEL NO.:	6160
WIDTH:	25.6"
DEPTH:	26.0"
HEIGHT:	63.0"
WEIGHT:	605 LBS

1 A-7 ENCLOSURE 6160 (OUTDOOR)
SCALE: NTS

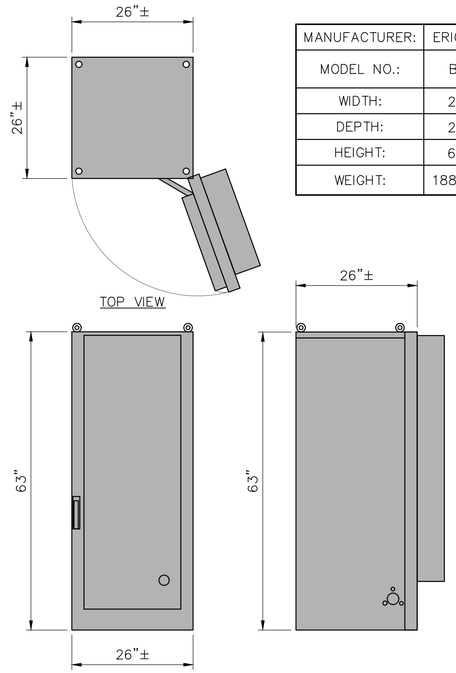

MANUFACTURER:	ERICSSON
MODEL NO.:	B160
WIDTH:	26.0"
DEPTH:	26.0"
HEIGHT:	63.0"
WEIGHT:	1883 LBS

2 A-7 ENCLOSURE B160 (OUTDOOR)
SCALE: NTS

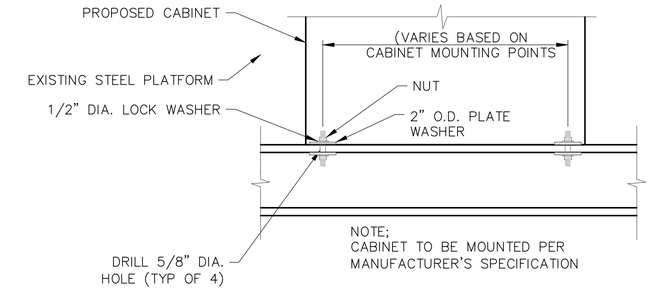

3 A-7 CABINET MOUNTING DETAIL
SCALE: NTS

MANUFACTURER:	TBD
MODEL NO.:	HCS 6X24
WEIGHT:	2.65 LBS/FT
DIAMETER:	1.99" (±.1")

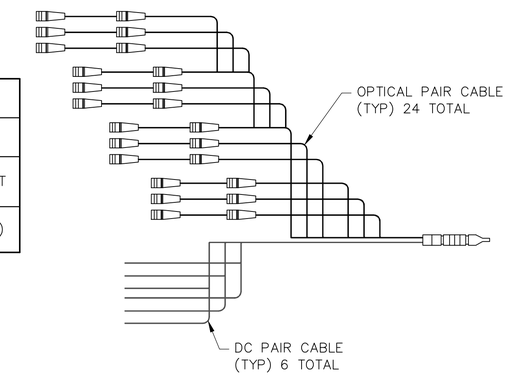

4 A-7 6x24 HYBRID CABLE DETAIL
SCALE: NTS

MANUFACTURER:	ERICSSON
MODEL:	6648 BASEBAND UNIT
HEIGHT:	TBD
WIDTH:	TBD
DEPTH:	TBD
WEIGHT:	TBD

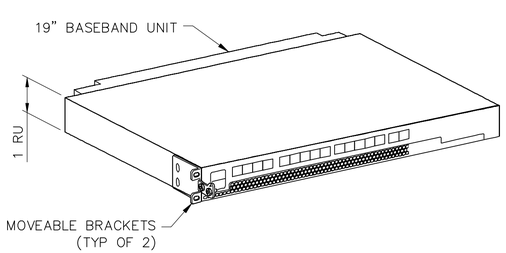

5 A-7 6648 BASEBAND UNIT DETAIL
SCALE: NTS

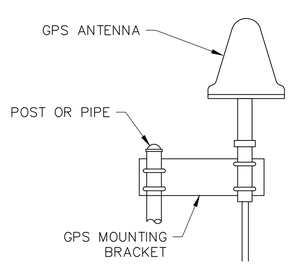

MANUFACTURER:	SYMMETRICOM
MODEL:	58532A
HEIGHT:	6.42"
WIDTH:	3.54"
WEIGHT:	0.41 LBS

6 A-7 GPS ANTENNA MOUNTING DETAIL
SCALE: NTS

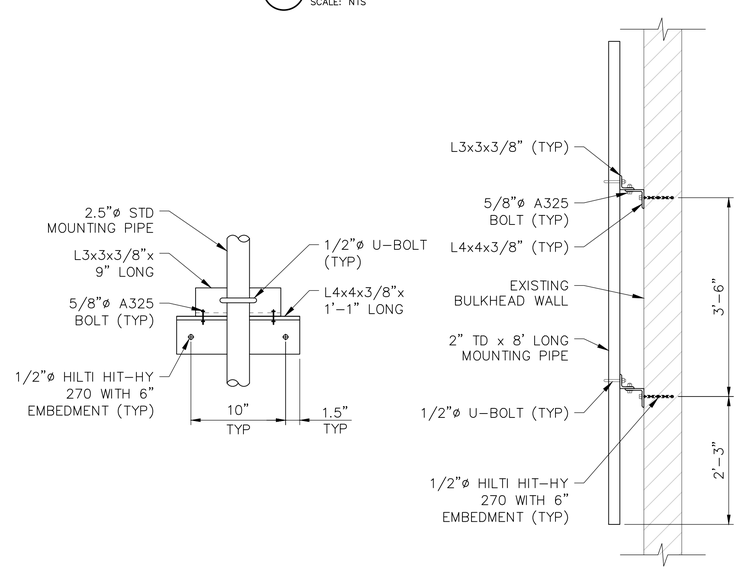

7 A-7 MOUNT CONNECTION DETAIL
SCALE: 3/4" = 1'-0" (22x34 SIZE)
1-1/2" = 1'-0" (11x17 SIZE)

CONFIGURATION
67D5A997DB 6160
REFER TO LATEST T-MOBILE RF DATA SHEET FOR FINAL RF DESIGN & BOM

PYRAMID Network Services, LLC

Sprint Now part of T-Mobile

103 MONARCH DRIVE
LIVERPOOL, NY 13088

Tectonic
PRACTICAL SOLUTIONS. EXCEPTIONAL SERVICE.
Tectonic Engineering Consultants, Geologists & Land Surveyors, D.P.C.
70 Pleasant Hill Road
P.O. Box 37
Mountainville, NY 10953
Phone: (845) 534-5959
(800) 829-6531
www.tectonicengineering.com
Project Contact Info
36 British American Blvd.
Suite 101
Latham, NY 12110
Phone: (518) 783-1630

WORK ORDER NUMBER	DRAWN BY
10666.023	DAI

NO.	DATE	ISSUE
0	02/18/21	FOR COMMENT
1	05/06/21	FOR COMMENT
2	06/14/21	PER COMMENTS
3	07/15/21	FOR ZONING

RELEASED BY	DATE

STATE OF NEW YORK · ADRIAN HOWARD MASSIE · 101061 · LICENSED PROFESSIONAL ENGINEER
7/15/21

UNAUTHORIZED ALTERATION OR ADDITIONS TO A PLAN BEARING THE SEAL OF A LICENSED ENGINEER OR LAND SURVEYOR IS A VIOLATION OF SECTION 7209 SUBDIVISION 2 OF THE NEW YORK STATE EDUCATION LAW.

COPIES OF THIS DOCUMENT WITHOUT A FACSIMILE OF THE SIGNATURE AND AN ORIGINAL EMBOSSED SEAL OR ORIGINAL STAMP IN BLUE OR RED INK OF THE PROFESSIONAL ENGINEER OR LAND SURVEYOR SHALL NOT BE CONSIDERED VALID COPIES.

0 1 2 3
ORIGINAL SIZE IN INCHES

SITE INFORMATION
UP40156A
FORMER FIRST NATIONAL BANK
AL53XC833

SITE ADDRESS
29 EAST MAIN ST
CITY OF AMSTERDAM
MONTGOMERY COUNTY
NY 12010

SHEET TITLE
DETAILS

SHEET NUMBER
A-7

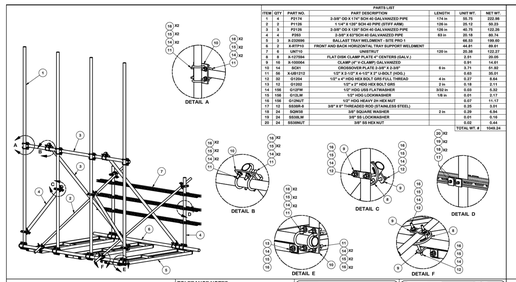

PARTS LIST

ITEM	QTY	PART NO.	PART DESCRIPTION	LENGTH	UNIT WT.	NET WT.
1	3	P1120	2.375" OD X 120" SCH 40 PIPE (STEP ARM)	120 in	25.13	75.39
2	3	P1136	1.1/4" X 120" SCH 40 PIPE (STEP ARM)	136 in	20.16	60.50
3	3	P2136	2.375" OD X 120" SCH 40 GALVANIZED PIPE	136 in	40.76	122.28
4	4	P350	3.500" X 50"SCH 40 GALVANIZED PIPE	50 in	26.16	99.74
5	3	A-C00600	BALLAST TRAY WELDMENT - SITE PRO 1		66.00	198.00
6	2	A-C00700	FRONT AND BACK HORIZONTAL SUPPORT WELDMENT		70.00	140.00
7	6	U60712	UNISTRUT	120 in	26.36	158.27
8	6	A-C07004	FLAT DOM CLAMP PLATE 4" CENTERS (GALV.)		0.91	54.60
9	16	A-C00804	CROSSBOW PLATE (GALV.) 3.00" X 3.00"		0.71	11.37
10	16	A-C00805	CROSSBOW U-BOLT 3.00" X 5.00"	5 in	0.91	14.56
11	32	A-M12112	1/2" X 2 1/2" X 4 1/2" X 2" U-BOLT (HDG.)		0.93	30.01
12	32	G1204	1/2" x 4" HDG HEX BOLT GR5 FULL THREAD	4 in	0.27	8.64
13	13	G1202	1/2" x 2" HDG HEX BOLT GR5	2 in	0.18	2.11
14	106	G1212	1/2" x 12" HDG HEX BOLT GR5	3/8 in	0.61	64.66
15	106	G1DLW	1/2" HDG LOCKWASHER	1/8 in	0.01	0.11
16	106	G1HNUT	1/2" HDG HEAVY 2H HEX NUT		0.07	11.17
17	12	S5308-8	.05" X 7" THREADED ROD (316 STAINLESS STEEL)		0.25	3.00
18	24	S0W38	3/8" SQUARE WASHER	2 in	0.29	6.94
19	24	S5W38	3/8" SS LOCKWASHER		0.02	0.44
20	24	S5HNUT	3/8" SS HEX NUT		0.02	0.48
					TOTAL WT. #	1049.24

TOLERANCE NOTES
TOLERANCES ON DIMENSIONS, UNLESS OTHERWISE NOTED AND BAKED, SHEARED AND GAS CUT EDGES (A.S.M.F.)
PUNCHED HOLES AND HOLES DRILLED IN THE BODY OF HOLES LARGER CUT EDGES AND HOLES (A.S.M.F.) NO CORNS OF HOLES
ALL OTHER MACHINING (A.S.M.F.)
ALL OTHER ASSEMBLY (A.S.M.F.)

DESCRIPTION: 3 LEVEL RRU / EQUIPMENT RACK FOR RTP FRAMES
DRN BY: CDK 4/23/2015 | ENG APPROVAL: | PART NO.: RTP10-3RRU
SCALE: NTS | DWG NO.: B1 | SHEET: 01 | CUSTOMER | DRAWN BY: BMC 4/24/2015 | DWG NO.: RTP10-3RRU | REV: 0
SITE PRO 1 Engineering Support Tools 1 800 783 7646 | LocalTech Inc. dba SITE PRO 1 Sterling, VA Los Angeles, CA Dallas, TX Atlanta, GA

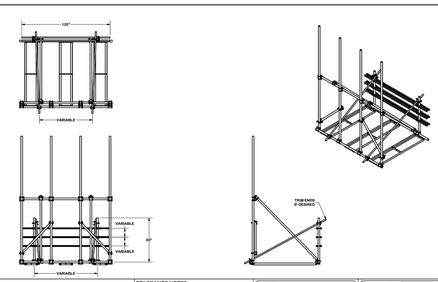

TOLERANCE NOTES
TOLERANCES ON DIMENSIONS, UNLESS OTHERWISE NOTED AND BAKED, SHEARED AND GAS CUT EDGES (A.S.M.F.)
PUNCHED HOLES AND HOLES DRILLED IN THE BODY OF HOLES LARGER CUT EDGES AND HOLES (A.S.M.F.) NO CORNS OF HOLES
ALL OTHER MACHINING (A.S.M.F.)
ALL OTHER ASSEMBLY (A.S.M.F.)

DESCRIPTION: 3 LEVEL RRU / EQUIPMENT RACK FOR RTP FRAMES
DRN BY: CDK 4/23/2015 | ENG APPROVAL: | PART NO.: RTP10-3RRU
SCALE: NTS | DWG NO.: B1 | SHEET: 01 | CUSTOMER | DRAWN BY: BMC 4/24/2015 | DWG NO.: RTP10-3RRU | REV: 0
SITE PRO 1 Engineering Support Tools 1 800 783 7646 | LocalTech Inc. dba SITE PRO 1 Sterling, VA Los Angeles, CA Dallas, TX Atlanta, GA

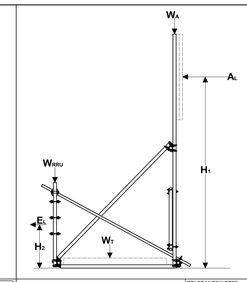

RTP FRAMES & RTP-RRU BALLAST EQUATIONS

BALLAST EQUATION WITH 1.5 SAFETY FACTOR:

$$\text{FRONT WIND} = W_T = \frac{((A_L*H_1)+(E_L*H_2)(1.5) - (W_R*7.25)}{3.625}$$

$$\text{BACK WIND} = W_T = \frac{((A_L*H_1)+(E_L*H_2)(1.5) - (W_{RRU}*7.25)}{3.625}$$

BALLAST EQUATION WITH REV. G LOADING:

$$\text{FRONT WIND} = W_T = \frac{((A_L*H_1)+(E_L*H_2)(1.5) - (W_R*7.25)}{3.625\ (0.9)}$$

$$\text{BACK WIND} = W_T = \frac{((A_L*H_1)+(E_L*H_2)(1.5) - (W_{RRU}*7.25)}{3.625\ (0.9)}$$

$$W = W_T / 3$$

E_L	= EQUIPMENT LOAD (NON-FACTORED)
A_L	= ANTENNA LOAD (NON-FACTORED)
H_1 & H_2	= HEIGHT FROM ROOFTOP
W_R	= 150 + ANTENNA WEIGHT
W_T	= BALLAST WEIGHT PER TRAY
W_{RRU}	= 150 + ANTENNA WEIGHT
W_T	= 350 + ANTENNA WEIGHT

TOLERANCE NOTES
TOLERANCES ON DIMENSIONS, UNLESS OTHERWISE NOTED AND BAKED, SHEARED AND GAS CUT EDGES (A.S.M.F.)
PUNCHED HOLES AND HOLES DRILLED IN THE BODY OF HOLES LARGER CUT EDGES AND HOLES (A.S.M.F.) NO CORNS OF HOLES
ALL OTHER MACHINING (A.S.M.F.)
ALL OTHER ASSEMBLY (A.S.M.F.)

DESCRIPTION: 3 LEVEL RRU / EQUIPMENT RACK FOR RTP FRAMES
DRN BY: CDK 4/23/2015 | ENG APPROVAL: | PART NO.: RTP10-3RRU
SCALE: NTS | DWG NO.: B1 | SHEET: 01 | CUSTOMER | DRAWN BY: BMC 4/24/2015 | DWG NO.: RTP10-3RRU | REV: 0
SITE PRO 1 Engineering Support Tools 1 800 783 7646 | LocalTech Inc. dba SITE PRO 1 Sterling, VA Los Angeles, CA Dallas, TX Atlanta, GA

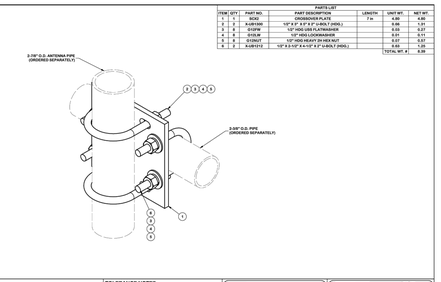

PARTS LIST

ITEM	QTY	PART NO.	PART DESCRIPTION	LENGTH	UNIT WT.	NET WT.
1	2	A-C00900	CROSSBOW PLATE - SCX2-K		0.71	1.42
2	2	A-M12100	1/2" X 2" X 4" U-BOLT (HDG.)		0.46	0.91
3	8	G1DFW	1/2" HDG USS FLATWASHER		0.03	0.27
4	8	G1DLW	1/2" HDG LOCKWASHER		0.01	0.11
5	8	G1DNUT	1/2" HDG HEAVY 2H HEX NUT		0.07	0.57
6	4	A-M12112	1/2" X 2 1/2" X 4 1/2" X 2" U-BOLT (HDG.)		0.93	3.72
					TOTAL WT. #	6.99

TOLERANCE NOTES
TOLERANCES ON DIMENSIONS, UNLESS OTHERWISE NOTED AND BAKED, SHEARED AND GAS CUT EDGES (A.S.M.F.)
PUNCHED HOLES AND HOLES DRILLED IN THE BODY OF HOLES LARGER CUT EDGES AND HOLES (A.S.M.F.) NO CORNS OF HOLES
ALL OTHER MACHINING (A.S.M.F.)
ALL OTHER ASSEMBLY (A.S.M.F.)

DESCRIPTION: CROSSBOW PLATE KIT
DRN BY: CDK 6/30/2011 | ENG APPROVAL: | PART NO.: SCX2-K
SCALE: NTS | DWG NO.: SHOP | DRAWN BY: BMC 7/15/2011 | DWG NO.: SCX2-K | REV: A
SITE PRO 1 Engineering Support Tools 1 800 783 7646 | LocalTech Inc. dba SITE PRO 1 Sterling, VA Los Angeles, CA Dallas, TX Atlanta, GA

1 / A–8 BALLAST MOUNT DETAIL

SCALE: N.T.S.
N.T.S.

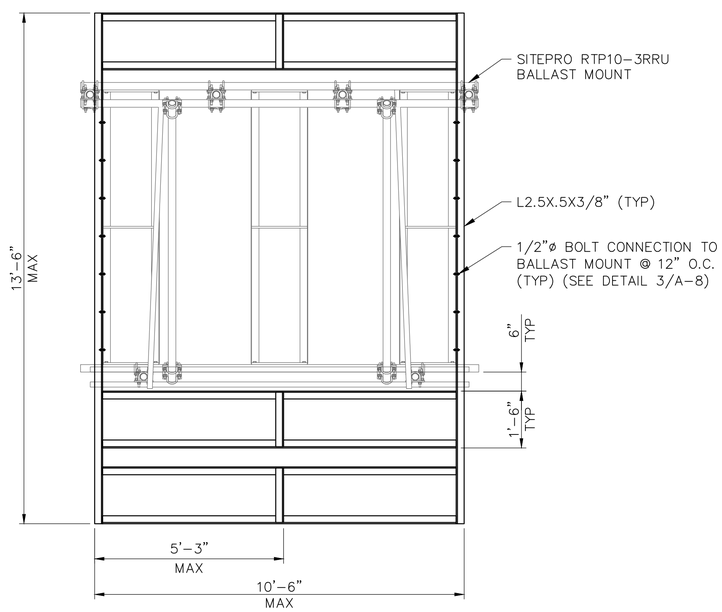

2 / A–8 BALLAST TRAY EXTENSION DETAIL

SCALE: N.T.S.
N.T.S.

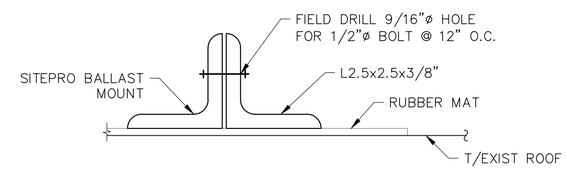

3 / A–8 BALLAST TRAY CONNECTION DETAIL

SCALE: N.T.S.
N.T.S.

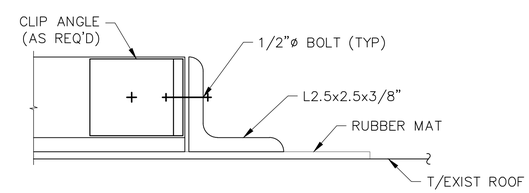

4 / A–8 FRAME CONNECTION DETAIL

SCALE: N.T.S.
N.T.S.

CONFIGURATION
67D5A997DB 6160
REFER TO LATEST T–MOBILE RF DATA SHEET FOR FINAL RF DESIGN & BOM

PYRAMID Network Services, LLC

Sprint Now part of T-Mobile
103 MONARCH DRIVE
LIVERPOOL, NY 13088

Tectonic
PRACTICAL SOLUTIONS. EXCEPTIONAL SERVICE.
Tectonic Engineering Consultants, Geologists & Land Surveyors, D.P.C.
70 Pleasant Hill Road
P.O. Box 37
Mountainville, NY 10953
Phone: (845) 534–5959
(800) 829–6531
www.tectonicengineering.com
Project Contact Info
38 British American Blvd.
Suite 101
Latham, NY 12110
Phone: (518) 783–1630

WORK ORDER NUMBER	DRAWN BY
10666.023	DAI

NO.	DATE	ISSUE
0	02/18/21	FOR COMMENT
1	05/06/21	FOR COMMENT
2	06/14/21	PER COMMENTS
3	07/15/21	FOR ZONING

RELEASED BY	DATE

UNAUTHORIZED ALTERATION OR ADDITIONS TO A PLAN BEARING THE SEAL OF A LICENSED ENGINEER OR LAND SURVEYOR IS A VIOLATION OF SECTION 7209 SUBDIVISION 2 OF THE NEW YORK STATE EDUCATION LAW.

COPIES OF THIS DOCUMENT WITHOUT A FACSIMILE OF THE SIGNATURE AND AN ORIGINAL EMBOSSED SEAL OR ORIGINAL STAMP IN BLUE OR RED INK OF THE PROFESSIONAL ENGINEER OR LAND SURVEYOR SHALL NOT BE CONSIDERED VALID COPIES.

0 1 2 3
ORIGINAL SIZE IN INCHES

SITE INFORMATION
UP40156A
FORMER FIRST NATIONAL BANK
AL53XC833

SITE ADDRESS
29 EAST MAIN ST
CITY OF AMSTERDAM
MONTGOMERY COUNTY
NY 12010

SHEET TITLE
SLED MOUNT DETAILS

SHEET NUMBER
A–8

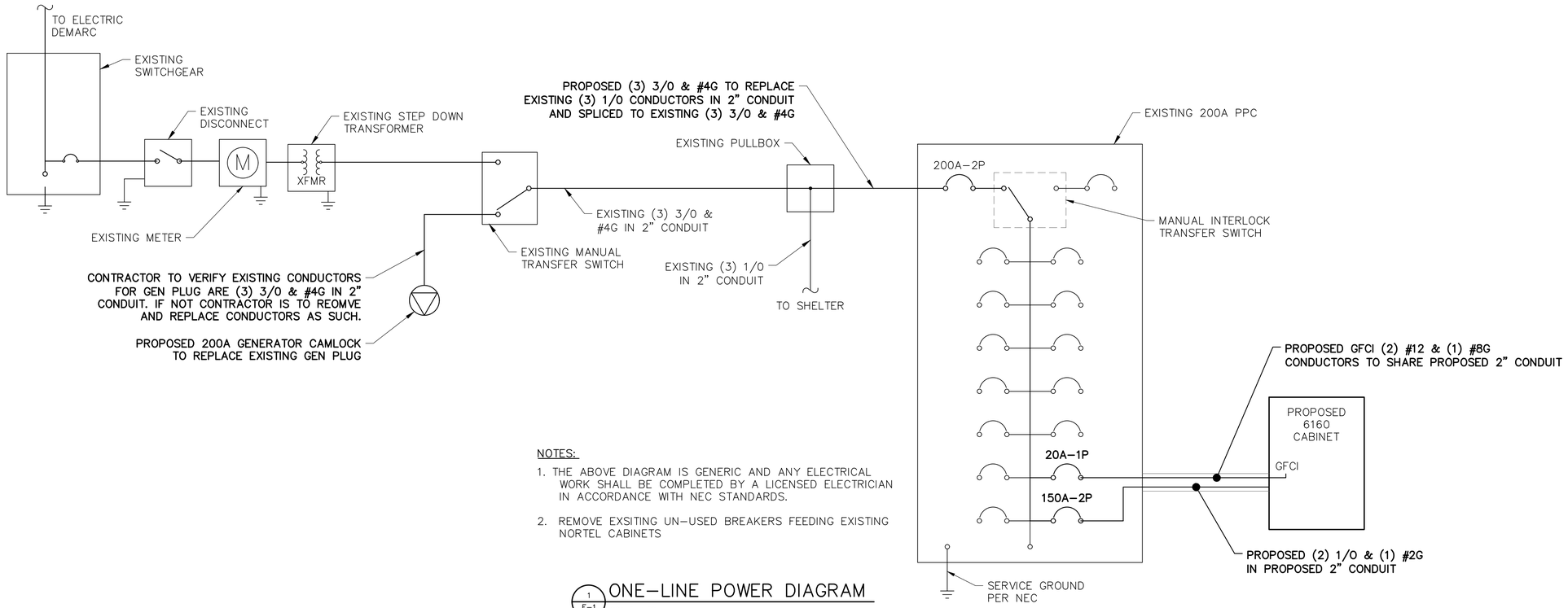

NOTES:

1. THE ABOVE DIAGRAM IS GENERIC AND ANY ELECTRICAL WORK SHALL BE COMPLETED BY A LICENSED ELECTRICIAN IN ACCORDANCE WITH NEC STANDARDS.
2. REMOVE EXSITING UN–USED BREAKERS FEEDING EXISTING NORTEL CABINETS

1 / E–1 ONE–LINE POWER DIAGRAM

SCALE: NTS

General Data

Enclosure dimensions (H x W x D)
23 x 10 x 9.5 inches

Weight
13 lbs (approx.)

Enclosure
- UL Type 3R aluminum enclosure
- Uses die-cast pin hinges, black powder coated
- Dead front panel protects utility gen set wiring connections (pictured below)

- Gasket provided to help insure water-tight seal
- Flush mount weld
- Bottom closure employs an integrated hinge for integrity, strength and durability while keeping bugs and critters out when gen set is not connected (pictured below)

- Bottom closure hinges open to provide 7.25" W x 3"D opening for cable conductors
- Cable management system is a bridge lance for plastic zip ties
- Optional Deutsch connector is connected via an "O ring" to base

Series Number	Product Configuration*
ICGC-1P	1Ø, L1, L2, N and G
ICGC-1P-CBL	1Ø, L1, L2, N and G with Deutsch connector and 20' CBL
ICGC-3P	3Ø, L1, L2, L3, N and G
ICGC-3P-CBL	3Ø, L1, L2, L3, N and G with Deutsch connector and 20' CBL
Accessories	
ICGC-CBL	1Ø or 3Ø Deutsch connector and 20' cable assembly
ICGC-MB	Mounting box for use with 1Ø or 3Ø ICGC enclosures

* All parts listed include male Cam Lok-style connectors. Units are UL 1008 Transfer Switch Power Inlet Standard rated for use on 120/240 or 120/208 V up to 200 amp installations

General Data (con't)

Powder coat paint
UL RAL 7035 - Light grey

Door
- Pad lockable
- Ships with left opening; may open to the right by moving hinges to the opposite side of cabinet (pictured below)

UL
UL 1008, 5th ed, or current
- Single phase, rated 240/120, 200 A, 10 kA short circuit
- Three phase, rated 208/120, 200 amps, 10 kA short circuit

Manufacturer's warranty
5 years

Cam Lok-Style Connectors

Type
Male

Electrical
- UL Listed Cam Lok-style, 180° twist on/off single-pole receptacles
- Conforms to NEC
- Rated up to 400 A, 208/120 V
- May be used for 240/120 single phase applications
- Terminal acceptance:
  - Plug: 200 A, #12 to 4/0 AWG
  - Receptacle: 200 A, #12 to 4/0 AWG

Power connectors
- Solid brass machined connectors
- Color coded:
  Green– Ground
  White–Neutral
  Black – Line 1
  Red– Line 2
  Blue–Line 3

Intersect, Inc.

P.O. Box 753 – Liberty Lake WA 99019 – USA
Phone: 509.255.9570 – Fax: 509.255.6034
www.intersectinc.com

All specifications subject to change without notice.
© Intersect, Inc. 2011. Rev. 111511.

2 / E–1 CAMLOCK GEN CONNECTOR SPECIFICATIONS

SCALE: NTS

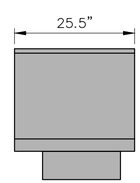

TOP

MANUFACTURER:	WESTELL
MODEL NO.:	BXM–10N–HE3–20A
WIDTH	25.5"
DEPTH	27.8"
HEIGHT	22.5"

NOTE:

INSTALL CABINET ANCHORS PER MANUFACTURER'S INSTALLATION GUIDELINES

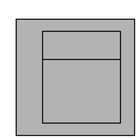

FRONT

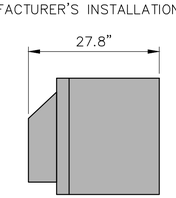

SIDE

3 / E–1 WESTELL BOX DETAIL

SCALE: NTS

CONFIGURATION
67D5A997DB 6160
REFER TO LATEST T–MOBILE RF DATA SHEET FOR FINAL RF DESIGN & BOM

PYRAMID Network Services, LLC

Sprint Now part of T-Mobile

103 MONARCH DRIVE
LIVERPOOL, NY 13088

Tectonic
PRACTICAL SOLUTIONS. EXCEPTIONAL SERVICE.
Tectonic Engineering Consultants, Geologists & Land Surveyors, D.P.C.
70 Pleasant Hill Road
P.O. Box 37
Mountainville, NY 10953
Phone: (845) 534–5959
(800) 829–6531
www.tectonicengineering.com
Project Contact Info
36 British American Blvd.
Suite 101
Latham, NY 12110
Phone: (518) 783–1630

WORK ORDER NUMBER	DRAWN BY
10666.023	DAI

NO.	DATE	ISSUE
0	02/18/21	FOR COMMENT
1	05/06/21	FOR COMMENT
2	06/14/21	PER COMMENTS
3	07/15/21	FOR ZONING

RELEASED BY	DATE

STATE OF NEW YORK · ADRIAN HOWARD MASSIE · 101061 · LICENSED PROFESSIONAL ENGINEER
7/15/21

UNAUTHORIZED ALTERATION OR ADDITIONS TO A PLAN BEARING THE SEAL OF A LICENSED ENGINEER OR LAND SURVEYOR IS A VIOLATION OF SECTION 7209 SUBDIVISION 2 OF THE NEW YORK STATE EDUCATION LAW.

COPIES OF THIS DOCUMENT WITHOUT A FACSIMILE OF THE SIGNATURE AND AN ORIGINAL EMBOSSED SEAL OR ORIGINAL STAMP IN BLUE OR RED INK OF THE PROFESSIONAL ENGINEER OR LAND SURVEYOR SHALL NOT BE CONSIDERED VALID COPIES.

0 1 2 3
ORIGINAL SIZE IN INCHES

SITE INFORMATION

UP40156A
FORMER FIRST NATIONAL BANK
AL53XC833

SITE ADDRESS

29 EAST MAIN ST
CITY OF AMSTERDAM
MONTGOMERY COUNTY
NY 12010

SHEET TITLE

ELECTRICAL DETAILS

SHEET NUMBER

E–1

LEGEND

METER	COPPER GROUND BAR
CIRCUIT BREAKER	GROUND CONDUCTOR BY CONTRACTOR
CADWELD TYPE CONNECTION BY CONTRACTOR	GROUND RING BY CONTRACTOR
COAXIAL CABLE SHIELD GROUND KIT CONNECTION	GROUND ROD WITH TEST WELL
COMPRESSION FITTING GROUND CONNECTION	GROUND ROD

ABBREVIATIONS

A	AMPERE
C	CONDUIT
GND	GROUND
KWH	KILOWATT HOUR
P	POLE
SN	SOLID NEUTRAL
SW	SWITCH
V	VOLT
W	WIRE
WP	WEATHERPROOF
ø	PHASE
TGB	TOP GROUND BAR
MGB	MASTER GROUND BAR
BGB	BOTTOM GROUND BAR
PGB	EXISTING GROUND BAR

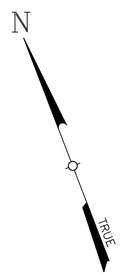

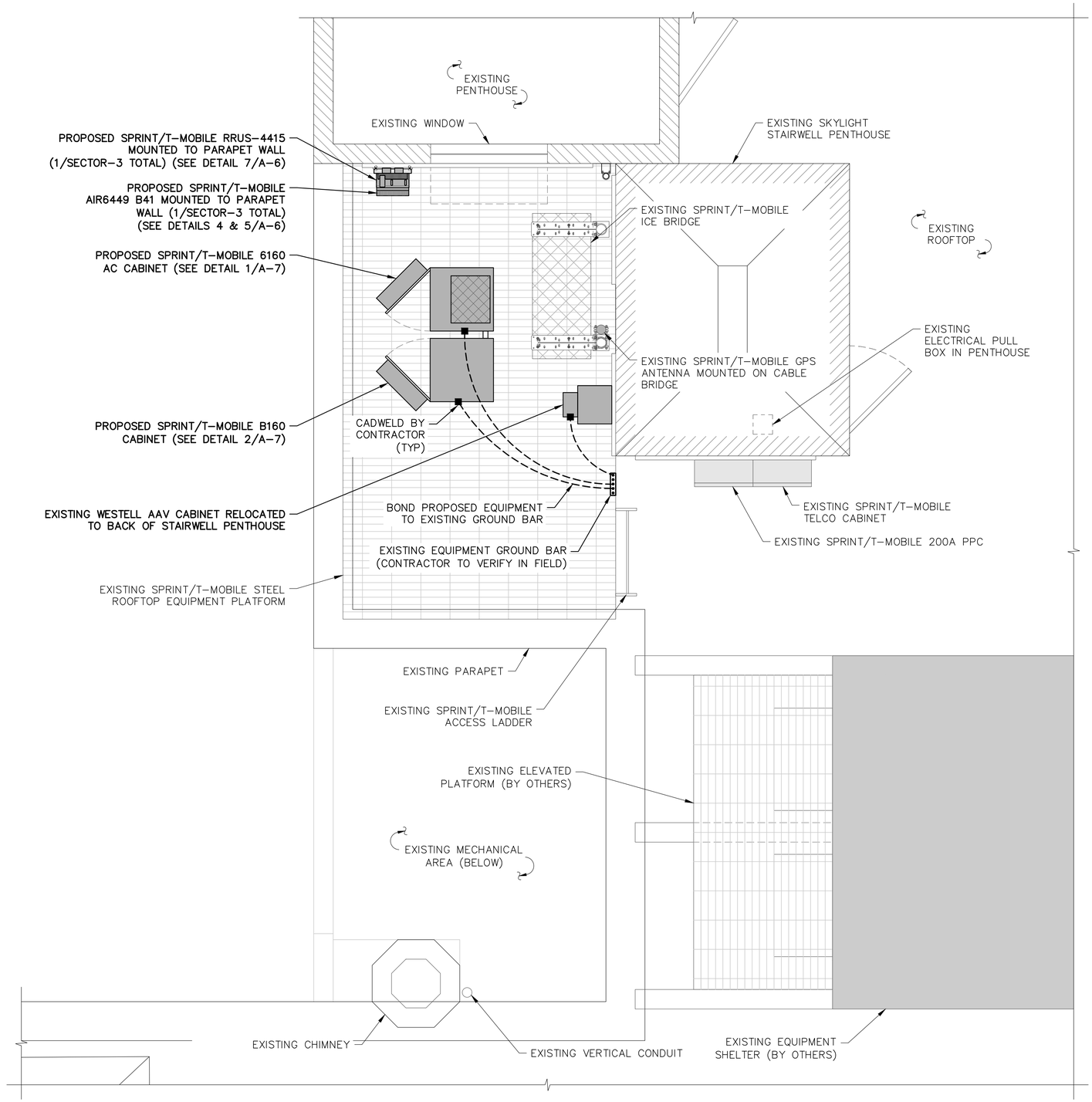

1 / G-1 GROUNDING PLAN

SCALE: 1/2" = 1'-0" (22x34 SIZE)
1/4" = 1'-0" (11x17 SIZE)

CONFIGURATION
67D5A997DB 6160
REFER TO LATEST T-MOBILE RF DATA SHEET FOR FINAL RF DESIGN & BOM

PYRAMID Network Services, LLC

Sprint Now part of T-Mobile

103 MONARCH DRIVE
LIVERPOOL, NY 13088

Tectonic
PRACTICAL SOLUTIONS. EXCEPTIONAL SERVICE.
Tectonic Engineering Consultants, Geologists & Land Surveyors, D.P.C.
70 Pleasant Hill Road
P.O. Box 37
Mountainville, NY 10953
Phone: (845) 534-5959
(800) 829-6531
www.tectonicengineering.com
Project Contact Info
38 British American Blvd.
Suite 101
Latham, NY 12110
Phone: (518) 783-1630

WORK ORDER NUMBER	DRAWN BY
10666.023	DAI

NO.	DATE	ISSUE
0	02/18/21	FOR COMMENT
1	05/06/21	FOR COMMENT
2	06/14/21	PER COMMENTS
3	07/15/21	FOR ZONING

RELEASED BY	DATE

STATE OF NEW YORK · ADRIAN HOWARD MASSIE · 101061 · LICENSED PROFESSIONAL ENGINEER

7/15/21

UNAUTHORIZED ALTERATION OR ADDITIONS TO A PLAN BEARING THE SEAL OF A LICENSED ENGINEER OR LAND SURVEYOR IS A VIOLATION OF SECTION 7209 SUBDIVISION 2 OF THE NEW YORK STATE EDUCATION LAW.

COPIES OF THIS DOCUMENT WITHOUT A FACSIMILE OF THE SIGNATURE AND AN ORIGINAL EMBOSSED SEAL OR ORIGINAL STAMP IN BLUE OR RED INK OF THE PROFESSIONAL ENGINEER OR LAND SURVEYOR SHALL NOT BE CONSIDERED VALID COPIES.

0 1 2 3
ORIGINAL SIZE IN INCHES

SITE INFORMATION

UP40156A
FORMER FIRST NATIONAL BANK
AL53XC833

SITE ADDRESS

29 EAST MAIN ST
CITY OF AMSTERDAM
MONTGOMERY COUNTY
NY 12010

SHEET TITLE

GROUNDING PLAN

SHEET NUMBER

G-1

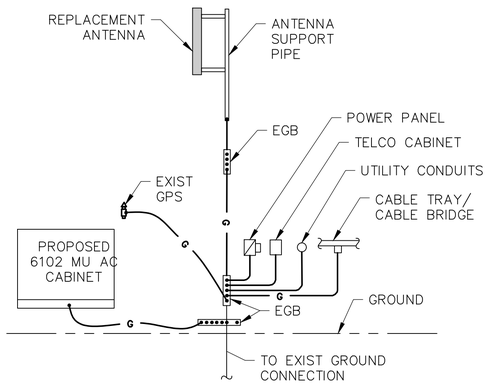

1 G-2 GROUNDING RISER DIAGRAM

SCALE: NTS

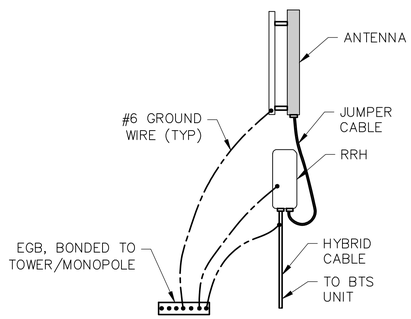

2 G-2 HYBRID CABLE CONNECTION DETAIL

SCALE: NTS

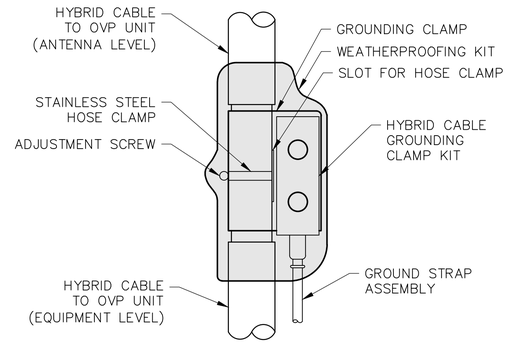

3 G-2 HYBRID CABLE GROUNDING DETAIL

SCALE: NTS

GROUNDING NOTES

1. THE ENTIRE ELECTRICAL INSTALLATION SHALL BE GROUNDED AS REQUIRED BY ALL APPLICABLE CODES.
2. ALL GROUNDING WORK SHALL BE IN ACCORDANCE WITH T-MOBILE STANDARD PRACTICE.
3. ALL BUS CONNECTORS SHALL BE TWO-HOLE, LONG-BARREL TYPE COMPRESSION LUGS, T&B OR EQUAL, UNLESS OTHERWISE NOTED ON DRAWINGS. ALL LUGS SHALL BE ATTACHED TO BUSSES USING BOLTS, NUTS, AND LOCK WASHERS. NO WASHERS ARE ALLOWED BETWEEN THE ITEMS BEING GROUNDED.
4. ALL CONNECTORS SHALL BE CRIMPED USING HYDRAULIC CRIMPING TOOLS, T&B #TBM 8 OR EQUIVALENT.
5. ALL CONNECTIONS SHALL BE MADE TO BARE METAL. ALL PAINTED SURFACES SHALL BE FILED TO ENSURE PROPER CONTACT. NO WASHERS ARE ALLOWED BETWEEN THE ITEMS BEING GROUNDED. ALL CONNECTIONS ARE TO HAVE A NON-OXIDIZING AGENT APPLIED PRIOR TO INSTALLATION.
6. ALL COPPER BUSSES SHALL BE CLEANED, POLISHED, AND A NON-OXIDIZING AGENT APPLIED. NO FINGERPRINTS OR DISCOLORED COPPER WILL BE PERMITTED.
7. ALL BENDS SHALL BE AS SHALLOW AS POSSIBLE, WITH NO TURN SHORTER THAN AN 8-INCH NOMINAL RADIUS.
8. GROUNDING CONDUCTORS SHALL BE SOLID TINNED COPPER AND ANNEALED #2. ALL GROUNDING CONDUCTORS SHALL RUN THROUGH PVC SLEEVES WHEREVER CONDUCTORS RUN THROUGH WALLS, FLOORS, OR CEILINGS. IF CONDUCTORS MUST RUN THROUGH EMT, BOTH ENDS OF CONDUIT SHALL BE GROUNDED. SEAL BOTH ENDS OF CONDUIT WITH SILICONE CAULK.
9. GROUNDING SYSTEM RESISTANCE SHALL NOT EXCEED 10 OHMS. IF THE RESISTANCE VALUE IS EXCEEDED, NOTIFY THE PROJECT MANAGER FOR FURTHER INSTRUCTION ON METHODS FOR REDUCING THE RESISTANCE VALUE.
10. ALL ROOF TOP ANTENNA MOUNTS SHALL BE GROUNDED WITH A #2 GROUND WIRE CONNECTED TO THE NEAREST GROUND BUS. ALL CONNECTIONS ARE TO BE CAD-WELDED IF POSSIBLE.
11. UPON COMPLETION OF WORK, CONDUCT CONTINUITY, SHORT CIRCUIT, AND FALL OF POTENTIAL GROUNDING TESTS FOR APPROVAL. SUBMIT TEST REPORTS TO THE PROJECT MANAGER.
12. GROUNDING CONNECTION TO TRAVEL IN A DOWNWARD DIRECTION.
13. ALL EXPOSED #2 WIRE MUST BE TINN NOT BTW.
14. TECTONIC TAKES NO RESPONSIBILITY OR LIABILITY FOR THE GROUNDING SYSTEM AS SHOWN ON THIS SITE. THIS IS A STANDARD GROUNDING SYSTEM.

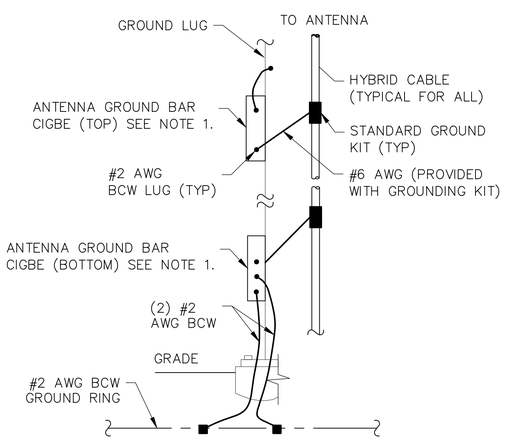

NOTES:

1. NUMBER OF GROUND BARS MAY VARY DEPENDING ON THE TYPE OF TOWER. ANTENNA LOCATION AND CONNECTION ANTENNA LOCATION AND CONNECTION ORIENTATION. PROVIDE AS REQUIRED.
2. A SEPARATE GROUND BAR TO BE USED FOR GPS UNIT IF REQUIRED.

4 G-2 ANTENNA CABLE GROUNDING

SCALE: NTS

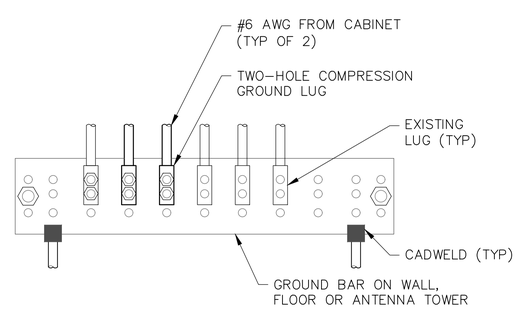

5 G-2 GROUND BUS BAR DETAIL

SCALE: NTS

CONFIGURATION
67D5A997DB 6160
REFER TO LATEST T-MOBILE RF DATA SHEET FOR FINAL RF DESIGN & BOM

PYRAMID Network Services, LLC

Sprint Now part of T-Mobile

103 MONARCH DRIVE
LIVERPOOL, NY 13088

Tectonic
PRACTICAL SOLUTIONS. EXCEPTIONAL SERVICE.
Tectonic Engineering Consultants, Geologists & Land Surveyors, D.P.C.
70 Pleasant Hill Road
P.O. Box 37
Mountainville, NY 10953
Phone: (845) 534-5959
(800) 829-6531
www.tectonicengineering.com
Project Contact Info
38 British American Blvd.
Suite 101
Latham, NY 12110
Phone: (518) 783-1630

WORK ORDER NUMBER	DRAWN BY
10666.023	DAI

NO.	DATE	ISSUE
0	02/18/21	FOR COMMENT
1	05/06/21	FOR COMMENT
2	06/14/21	PER COMMENTS
3	07/15/21	FOR ZONING

RELEASED BY	DATE

STATE OF NEW YORK · ADRIAN HOWARD MASSIE · 101061 · LICENSED PROFESSIONAL ENGINEER
7/15/21

UNAUTHORIZED ALTERATION OR ADDITIONS TO A PLAN BEARING THE SEAL OF A LICENSED ENGINEER OR LAND SURVEYOR IS A VIOLATION OF SECTION 7209 SUBDIVISION 2 OF THE NEW YORK STATE EDUCATION LAW.

COPIES OF THIS DOCUMENT WITHOUT A FACSIMILE OF THE SIGNATURE AND AN ORIGINAL EMBOSSED SEAL OR ORIGINAL STAMP IN BLUE OR RED INK OF THE PROFESSIONAL ENGINEER OR LAND SURVEYOR SHALL NOT BE CONSIDERED VALID COPIES.

0 1 2 3
ORIGINAL SIZE IN INCHES

SITE INFORMATION

UP40156A
FORMER FIRST NATIONAL BANK
AL53XC833

SITE ADDRESS

29 EAST MAIN ST
CITY OF AMSTERDAM
MONTGOMERY COUNTY
NY 12010

SHEET TITLE

GROUNDING DETAILS

SHEET NUMBER

G-2

Short Environmental Assessment Form
Part 1 - Project Information

Instructions for Completing

Part 1 – Project Information. The applicant or project sponsor is responsible for the completion of Part 1. Responses become part of the application for approval or funding, are subject to public review, and may be subject to further verification. Complete Part 1 based on information currently available. If additional research or investigation would be needed to fully respond to any item, please answer as thoroughly as possible based on current information.

Complete all items in Part 1. You may also provide any additional information which you believe will be needed by or useful to the lead agency; attach additional pages as necessary to supplement any item.

Part 1 – Project and Sponsor Information

Name of Action or Project:

Sprint/T-Mobile - Former First National Bank - Unmanned Wireless Communications Facility

Project Location (describe, and attach a location map):

29 East Main St - City of Amsterdam - Montgomery County - New York - 12010

Brief Description of Proposed Action:

Sprint/T-Mobile proposes the modification of an unmanned wireless communications facility on the roof of the existing building. Said property being located on East Main Street, approximately 100 feet South West of the intersection of East Main Street and Chuctanunda Road. Access to the proposed facility will originate from East Main Street utilizing the existing paved parking lot.

In general, the installation will consist of the following: Removing six (6) existing antennas, installing nine (9) new antennas at center-line height(s) of 103 and 107 feet on the roof of the existing 112-foot tall building, replacing ancillary radio equipment, remove two (2) existing equipment cabinets, install two (2) new equipment cabinets.

Name of Applicant or Sponsor:	Telephone: (631) 445-0653
John Cuttone, agent for Sprint/T-Mobile	E-Mail: jcuttone@pyramidnetworkservices.com

Address:

103 Monarch Dr

City/PO:	State:	Zip Code:
Liverpool	NY	13088

	NO	YES
1. Does the proposed action only involve the legislative adoption of a plan, local law, ordinance, administrative rule, or regulation? If Yes, attach a narrative description of the intent of the proposed action and the environmental resources that may be affected in the municipality and proceed to Part 2. If no, continue to question 2.	☑	☐
2. Does the proposed action require a permit, approval or funding from any other government Agency? If Yes, list agency(s) name and permit or approval: City of Amsterdam Planning Commission - Site Plan Approval. City of Amsterdam Building Department - Building permit	☐	☑

3. a. Total acreage of the site of the proposed action? 0.43 acres
   b. Total acreage to be physically disturbed? 0 acres
   c. Total acreage (project site and any contiguous properties) owned or controlled by the applicant or project sponsor? 0 acres

4. Check all land uses that occur on, are adjoining or near the proposed action:

☑ Urban ☐ Rural (non-agriculture) ☐ Industrial ☐ Commercial ☐ Residential (suburban)

☐ Forest ☐ Agriculture ☐ Aquatic ☐ Other(Specify):

☐ Parkland

	NO	YES	N/A
5. Is the proposed action,			
a. A permitted use under the zoning regulations?	☐	☑	☐
b. Consistent with the adopted comprehensive plan?	☐	☑	☐

	NO	YES
6. Is the proposed action consistent with the predominant character of the existing built or natural landscape?	☐	☑

	NO	YES
7. Is the site of the proposed action located in, or does it adjoin, a state listed Critical Environmental Area? If Yes, identify: _____	☑	☐

	NO	YES
8. a. Will the proposed action result in a substantial increase in traffic above present levels?	☑	☐
b. Are public transportation services available at or near the site of the proposed action?	☐	☑
c. Are any pedestrian accommodations or bicycle routes available on or near the site of the proposed action?	☐	☑

	NO	YES
9. Does the proposed action meet or exceed the state energy code requirements? If the proposed action will exceed requirements, describe design features and technologies: _____ _____	☐	☑

	NO	YES
10. Will the proposed action connect to an existing public/private water supply? If No, describe method for providing potable water: _____ Potable water service is not required since the proposed facility is an unmanned facility. _____	☑	☐

	NO	YES
11. Will the proposed action connect to existing wastewater utilities? If No, describe method for providing wastewater treatment: _____ There will be no wastewater generated since the proposed facility is an unmanned facility. _____	☑	☐

	NO	YES
12. a. Does the project site contain, or is it substantially contiguous to, a building, archaeological site, or district which is listed on the National or State Register of Historic Places, or that has been determined by the Commissioner of the NYS Office of Parks, Recreation and Historic Preservation to be eligible for listing on the State Register of Historic Places?	☐	☑
First National Bank Building b. Is the project site, or any portion of it, located in or adjacent to an area designated as sensitive for archaeological sites on the NY State Historic Preservation Office (SHPO) archaeological site inventory?	☑	☐

	NO	YES
13. a. Does any portion of the site of the proposed action, or lands adjoining the proposed action, contain wetlands or other waterbodies regulated by a federal, state or local agency?	☐	☑
b. Would the proposed action physically alter, or encroach into, any existing wetland or waterbody?	☑	☐
If Yes, identify the wetland or waterbody and extent of alterations in square feet or acres: _____ _____ _____		

14. Identify the typical habitat types that occur on, or are likely to be found on the project site. Check all that apply:

☐ Shoreline ☐ Forest ☐ Agricultural/grasslands ☐ Early mid-successional

☐ Wetland ☑ Urban ☐ Suburban

	NO	YES
15. Does the site of the proposed action contain any species of animal, or associated habitats, listed by the State or Federal government as threatened or endangered?	☐	☑
16. Is the project site located in the 100-year flood plan?	☑	☐
17. Will the proposed action create storm water discharge, either from point or non-point sources?	☑	☐
If Yes,		
a. Will storm water discharges flow to adjacent properties?	☐	☐
b. Will storm water discharges be directed to established conveyance systems (runoff and storm drains)?	☐	☐
If Yes, briefly describe:		
18. Does the proposed action include construction or other activities that would result in the impoundment of water or other liquids (e.g., retention pond, waste lagoon, dam)? If Yes, explain the purpose and size of the impoundment:	☑	☐
19. Has the site of the proposed action or an adjoining property been the location of an active or closed solid waste management facility? If Yes, describe:	☑	☐
20. Has the site of the proposed action or an adjoining property been the subject of remediation (ongoing or completed) for hazardous waste? If Yes, describe: 429008: Providing that the 2006 remedy is maintained, the site itself no longer presents an environmental threat, E429011: Completion date12/01/2015, V00367: Providing that the 2006 remedy is maintained, the site itself no longer presents an env threat	☐	☑

I CERTIFY THAT THE INFORMATION PROVIDED ABOVE IS TRUE AND ACCURATE TO THE BEST OF MY KNOWLEDGE

Applicant/sponsor/name: Steven Matthews, Engineer for applicant Date: 7/16/2021

Signature: Steven Matthews Title: Director of Engineering

PRINT FORM

Agency Use Only [If applicable]

Project:

Date:

Short Environmental Assessment Form
Part 2 - Impact Assessment

Part 2 is to be completed by the Lead Agency.
Answer all of the following questions in Part 2 using the information contained in Part 1 and other materials submitted by the project sponsor or otherwise available to the reviewer. When answering the questions the reviewer should be guided by the concept "Have my responses been reasonable considering the scale and context of the proposed action?"

	No, or small impact may occur	Moderate to large impact may occur
1. Will the proposed action create a material conflict with an adopted land use plan or zoning regulations?	☐	☐
2. Will the proposed action result in a change in the use or intensity of use of land?	☐	☐
3. Will the proposed action impair the character or quality of the existing community?	☐	☐
4. Will the proposed action have an impact on the environmental characteristics that caused the establishment of a Critical Environmental Area (CEA)?	☐	☐
5. Will the proposed action result in an adverse change in the existing level of traffic or affect existing infrastructure for mass transit, biking or walkway?	☐	☐
6. Will the proposed action cause an increase in the use of energy and it fails to incorporate reasonably available energy conservation or renewable energy opportunities?	☐	☐
7. Will the proposed action impact existing: a. public / private water supplies?	☐	☐
b. public / private wastewater treatment utilities?	☐	☐
8. Will the proposed action impair the character or quality of important historic, archaeological, architectural or aesthetic resources?	☐	☐
9. Will the proposed action result in an adverse change to natural resources (e.g., wetlands, waterbodies, groundwater, air quality, flora and fauna)?	☐	☐
10. Will the proposed action result in an increase in the potential for erosion, flooding or drainage problems?	☐	☐
11. Will the proposed action create a hazard to environmental resources or human health?	☐	☐

PRINT FORM

Agency Use Only [If applicable]

Project:

Date:

Short Environmental Assessment Form
Part 3 Determination of Significance

For every question in Part 2 that was answered "moderate to large impact may occur", or if there is a need to explain why a particular element of the proposed action may or will not result in a significant adverse environmental impact, please complete Part 3. Part 3 should, in sufficient detail, identify the impact, including any measures or design elements that have been included by the project sponsor to avoid or reduce impacts. Part 3 should also explain how the lead agency determined that the impact may or will not be significant. Each potential impact should be assessed considering its setting, probability of occurring, duration, irreversibility, geographic scope and magnitude. Also consider the potential for short-term, long-term and cumulative impacts.

☐ Check this box if you have determined, based on the information and analysis above, and any supporting documentation, that the proposed action may result in one or more potentially large or significant adverse impacts and an environmental impact statement is required.

☐ Check this box if you have determined, based on the information and analysis above, and any supporting documentation, that the proposed action will not result in any significant adverse environmental impacts.

Name of Lead Agency	Date
Print or Type Name of Responsible Officer in Lead Agency	Title of Responsible Officer
Signature of Responsible Officer in Lead Agency	Signature of Preparer (if different from Responsible Officer)

PRINT FORM

Tectonic
PRACTICAL SOLUTIONS. EXCEPTIONAL SERVICE.

Date: **June 04, 2021**

Antenna Mount Analysis Report

Project Information:

Carrier:	Sprint/T-Mobile
Scope of Work:	"Sprint Retain"
Site Name:	Former First National Bank
Site Address:	29 East Main Street, Amsterdam, NY 12010
Site Type:	Rooftop Mounted Antennas

Tectonic Project Number:	10666.023
Sprint/T-Mobile Site ID Number:	UP40156A

Tectonic Engineering Consultants, Geologists & Land Surveyors, D.P.C. is pleased to submit this **"Antenna Mount Analysis Report"** to determine the structural integrity of the above-mentioned rooftop antenna mount site.

The purpose of this analysis is to determine the acceptability of the existing and proposed antenna mounts. Based on our analysis we have determined the stress level at each sector to be as follows:

All Sectors **Sufficient**

This analysis has been performed in accordance with the ASCE 7-16 and the 2020 New York State Building Code based upon an ultimate 3-second gust wind speed of 110 mph as required for use in the TIA-222-H Standard. Exposure Category C and Risk Category II were used in this analysis.

We appreciate the opportunity of providing our continuing professional services to you. If you have any questions or need further assistance on this or any other projects please give us a call.

Structural analysis prepared by/reviewed by: Robert Keddrell / Joseph Lubrano

Respectfully submitted by:
Tectonic Engineering Consultants, Geologists & Land Surveyors, D.P.C.

STATE OF NEW YORK
EDWARD N. IAMICELI
EXCELSIOR
093629
LICENSED PROFESSIONAL ENGINEER

Edward Iamiceli, P.E.
Managing Director-Structural

Project Contact Info

1279 Route 300 | Newburgh, NY 12550
845.567.6656 Tel | 845.567.8703 Fax

tectonicengineering.com
Equal Opportunity Employer

TABLE OF CONTENTS

1) INTRODUCTION/PURPOSE

2) ANALYSIS CRITERIA
Table 1 - Proposed Antenna Mount Loading Information

3) ANALYSIS PROCEDURE
Table 2 - Documents Provided
3.1) Analysis Method
3.2) Assumptions

4) ANALYSIS RESULTS
Table 3 – Mount Stresses/Adequacy
4.1) Results/Conclusions

5) APPENDIX A
Software Input Calculations

6) APPENDIX B
Wire Frame and Rendered Models

7) APPENDIX C
Software Analysis Output

8) APPENDIX D
Additional Calculations

9) APPENDIX E
References & Structural Details

1) INTRODUCTION/PURPOSE

Analysis of the existing and proposed antenna mounts due to the loading of the proposed antennas, equipment and related appurtenances on the rooftop of the existing building structure.

2) ANALYSIS CRITERIA

TIA-222 Revision:	TIA-222-H
Risk Category:	II
Wind Speed:	110 mph
Exposure Category:	C
Topographic Factor:	1.0
Ice Thickness:	1.0 in
Wind Speed with Ice:	40 mph
Service Wind Speed:	60 mph

Table 1 - Proposed Antenna Mount Loading Information

Centerline (ft)	Carrier Designation	Quantity	Antenna Manufacturer	Antenna Model	Mount Type	Note
107	Sprint/ T-Mobile	2	RFS	APXVAALL24_43-U-NA20	Pipe Mount	1
		2	Ericsson	AIR6449 B41		
		2	Ericsson	AIR32 KRD901146-1_B66A		
		2	Ericsson	Radio 4449 B71+B85		
		2	Ericsson	Radio 4415 B25		
103		1	RFS	APXVAALL24_43-U-NA20	Ballast Mount (Site Pro 1 p/n: RTP10-3RRU)	2
		1	Ericsson	AIR6449 B41		
		1	Ericsson	AIR32 KRD901146-1_B66A		
		1	Ericsson	Radio 4449 B71+B85		
		1	Ericsson	Radio 4415 B25		

Notes:
1) To be mounted on existing and proposed mounts.
2) To be mounted on proposed ballast mount.

3) ANALYSIS PROCEDURE

Table 2 - Documents Provided

Document	Prepared By	Dated
Construction Drawings	Ramaker & Assocaites, INC.	07/19/18
Field Notes and Photos	Tectonic	01/26/21
RFDS	T-Mobile	03/23/21
Preliminary Construction Drawings	Tectonic	05/06/21

3.1) Analysis Method

A tool internally developed, using Microsoft Excel, was used to calculate wind loading on all appurtenances and mount members. This information was then used in conjunction with another program, RISA-3D, which is a commercially available analysis software package, used to check the supporting members and calculate member stresses for various loading cases. The selected output from the analysis is included in Appendix C.

3.2) Assumptions

1) The antenna mounting system was properly fabricated, installed, and maintained in good condition in accordance with its original design, TIA/ASCE Standards, and/or manufacturer's specifications.
2) The configuration of antennas, equipment, mounts, and other appurtenances are as specified in Table 1.
3) All member connections are assumed to have been designed to meet or exceed the load carrying capacity of the connected member unless otherwise specified in this report.
4) Steel grades have been assumed as follows, unless noted otherwise:

Channel, Solid Round, Angle, Plate	ASTM A36 (GR 36)
Pipe	ASTM A53 (GR 35)
Connection Bolts	ASTM A325

This analysis may be affected if any assumptions are not valid or have been made in error. Tectonic should be notified to determine the effect on the structural integrity of the mounts.

4) ANALYSIS RESULTS

Table 3 - Mount Stresses/Adequacy

Notes	Components	Centerline (ft)	Maximum % Capacity	Pass / Fail
1	Pipe Mount Members	107	98	Pass
2	Pipe Mount Anchors	107	79	Pass
1	Ballast Mount Members	103	93	Pass

Note:
1) See additional documentation in Appendix C for analysis output calculations supporting the % capacity utilized.
2) See additional documentation in Appendix D for analysis output calculations supporting the % capacity utilized.

4.1) Results/Conclusions

The existing and proposed mounts are adequate to support the proposed antennas and equipment as detailed in the attached report.

Sector 2 and 3 antenna mounts are mounted below the top of the bulkhead and the additional loads due to the proposed antennas and equipment will be transferred to the diaphragm of the bulkhead. Therefore, there will be minimal additional load being transferred to the bulkhead, the bulkhead is adequate to support the proposed antennas and equipment.

Contractor shall field verify existing conditions and recommendations as noted on the construction drawings and notify the design engineer of any discrepancies prior to construction. Any further changes to the antenna, equipment and/or appurtenance configuration should be reviewed with respect to their effect on structural loads prior to implementation.

APPENDIX A

SOFTWARE INPUT CALCULATIONS

Job No.:	10666.023		
Sheet No.:	1	of	4
Calculated By:	RTK	Date :	06/03/21
Checked By:	JL	Date :	06/03/21

WIND AND ICE LOADS PER TIA-222-H

W.O.	10666.023
Project Name	Former First National Bank
Location	29 East Main Street, Amsterdam, NY 12010
County	Montgomery

Tower Type	RT	Rooftop
Structure Height	97.5	ft
Supporting Str Height	0	ft Or ground mounted
Risk Category	II	Moderate risk
Exposure Category	C	Open terrain
Topo Category	1	Flat or rolling terrain
Height of crest	0	ft
Mean elevation (z_s)	278.75	ft

Basic Wind Speed (3-sec gust):		
Without ice	110	mph
With ice	40	mph
Maintenance Wind	60	mph
Ice thickness	1.00	in

Rooftop Wind Speed-up Factor		
Width of windward face (W_s)	86.76	ft
Height of windward face (H_s)	97.50	ft
Height of Parapet	3.67	ft
Horz distance from edge of bldg (X_b)	0.00	ft
Height above roof (Z_r)	13.17	ft

Importance Factor	
Ice thickness	1.00
Earthquake	1.00
Supporting Data:	
K_s	1.27
K_e	0.99
K_c	1.00
K_t	N/A
f	N/A
z_g	900
α	9.5
$K_{z,min}$	0.85
K_d	0.95
G_h	1.00

Height	**z (ft)	107
	Kh	N/A
	Kzt	1.00
	Kz	1.28
	Kiz	1.12
Wind Pressure, qz (psf)	No Ice	47.38
	With Ice	6.27
	Service	14.10
(t_{iz})	Ice Thk	1.12
Appurtenances (qzGh)	No Ice	47.38
	With Ice	6.27
	Service	14.10

**Note: The worst case centerline height is conservatively used.

Tectonic
PRACTICAL SOLUTIONS. EXCEPTIONAL SERVICE.

Job No.	10666.023		
Sheet No.	2	of	4
Calculated By	RTK	Date :	06/03/21
Checked By	JL	Date :	06/03/21

Equipment Information

Shielding factor, Ka: 1 — Section 16.6

WIND WITHOUT ICE

Antenna Configuration	Quantity Per Sector	z (ft)	Length or Diameter (ft)	Width (in)	Depth (in)	Flat or Cylindrical?	Antenna $(Ca)_N$	Antenna $(Ca)_T$	Face Normal $(A_a)_N$ (ft^2)	Windward Face Normal $(C_aA_a)_N$ (ft^2)	Side Face (Aa)T (ft^2)	Wind ward Side Face (CaAa)T (ft^2)	Normal Antenna Wind Load Each (lb)	Transverse Antenna Wind Load Each (lb)	Antenna Weight (lb)	Total Weight (lb)
AIR32 KRD901146-1_B66A	1	107	4.72	12.90	8.70	Flat	1.28	1.38	5.07	6.51	3.42	4.71	308	223	132.2	132.2
AIR6449 B41	1	107	2.76	20.60	8.60	Flat	1.20	1.26	4.74	5.68	1.98	2.49	269	118	104.0	104.0
APXVAALL24_43-U-NA20	1	107	7.99	24.00	8.50	Flat	1.27	1.54	15.98	20.24	5.66	8.73	959	414	143.3	143.3
RRU 4449 B71+B85	1	107	1.25	13.19	9.25	Flat	1.20	1.20	1.37	1.64	0.96	1.15	78	55	75.0	75.0
RRU 4415 B25	1	107	1.38	13.40	5.90	Flat	1.20	1.21	1.54	1.84	0.68	0.82	87	39	46.0	46.0
									$\sum(CaAA)_N$	35.92	$\sum(CaAA)_T$	17.91				501

WIND WITH ICE Ice Thk = 1.12 in

Antenna Configuration	Quantity Per Sector	z (ft)	Length or Diameter (ft)	Width (in)	Depth (in)	Flat or Cylindrical?	Antenna $(Ca)_N$	Antenna $(Ca)_T$	Face Normal $(A_a)_N$ (ft^2)	Windward Face Normal $(C_aA_a)_N$ (ft^2)	Side Face $(A_a)_T$ (ft^2)	Windward Side Face (CaAa)T (ft^2)	Normal Antenna Wind Load Each (lb)	Transverse Antenna Wind Load Each (lb)	Ice Area for Weight (ft^2)	Ice Weight Alone (lbs)
AIR32 KRD901146-1_B66A	1	107	4.90	15.15	10.95	Flat	1.26	1.328	6.19	7.81	4.47	5.94	49	37	17.0	89.1
AIR6449 B41	1	107	2.95	22.85	10.85	Flat	1.20	1.234	5.61	6.73	2.66	3.29	42	21	13.4	70.5
APXVAALL24_43-U-NA20	1	107	8.18	26.25	10.75	Flat	1.26	1.471	17.89	22.46	7.33	10.78	141	68	43.3	227.2
RRU 4449 B71+B85	1	107	1.43	15.44	11.50	Flat	1.20	1.200	1.84	2.21	1.37	1.65	14	10	4.7	24.5
RRU 4415 B25	1	107	1.56	15.65	8.15	Flat	1.20	1.200	2.04	2.45	1.06	1.27	15	8	4.4	23.2
									$\sum(CaAA)_N$	41.66	$\sum(CaAA)_T$	22.93				435

Tectonic
PRACTICAL SOLUTIONS. EXCEPTIONAL SERVICE.

Job No.	10666.023		
Sheet No.	3	of	4
Calculated By	RTK	Date :	06/03/21
Checked By	JL	Date :	06/03/21

Mounting System Information

							Reduction Factor =		1	Section 16.6	
Mount Part	**Projected Width (in)**	**Depth (in)**	**Flat or Cylindrical?**	**Force Coefficient**	**Projected Area (ft^2)**	**Wind Force (lbs/ft)**	**Ice Weight Area (ft^2)**	**Ice Weight (lbs/ft)**	**Projected Area with Ice (ft^2)**	**Wind Force Ice (lbs/ft)**	**Maintenance Wind Force (lbs/ft)**
STD 2.5" Pipe	2.88	2.88	Cylindrical	1.2	0.29	13.6	0.75	3.9	0.51	3.2	4.1
STD 2.0" Pipe	2.38	2.38	Cylindrical	1.2	0.24	11.3	0.62	3.3	0.46	2.9	3.3
STD 1.25" Pipe	1.30	1.30	Cylindrical	1.2	0.13	6.2	0.34	1.8	0.35	2.2	1.8

Tectonic				
PRACTICAL SOLUTIONS. EXCEPTIONAL SERVICE.	Job No.	10666.023		
	Sheet No.	4	of	4
	Calculated By	RTK	Date :	06/03/21
	Checked By	JL	Date :	06/03/21

Seismic Check

Tower Information

Tower Type:	RT	
Structure Height	97.5	ft
Supporting Structure Height	0	ft
Mount Height	107	ft

Geographic Information

City:	Amsterdam		
State:	New York		
County:	Montegomery		
Latitude:	42.936703	Longitude:	-74.192699

Seismic Information

Risk Category	II		
Importance Factor	1.00		
Site Soil Classificaiton	D		Table 2-10
S_s	0.218		https://asce7hazardtool.online/
S_1	0.063		
F_a	1.6		(Table 2-11, interpolation allowed)
F_V	2.4		(Table 2-12, interpolation allowed)
S_{DS}	0.233		Section 2.7.5
S_{D1}	0.1008		
R	3.00		Section 16.7
As	3.00		Section 16.7 & 2.7.8
Cs	0.08	>	0.03

Equivalent Lateral Force Procedure

Equipment (Discrete Appurtenances)

Antenna Configuration	(E) or (P)	Qty per Sector	z (ft)	Antenna Weight (lb)	Shear Vs= Cs*W (lbs)	Vert. Seismic load (Ev, lbs)	Seismic load (Eh, lbs)
AIR32 KRD901146-1_B66A	P	1	107	132	11	6	11
AIR6449 B41	P	1	107	104	8	5	8
APXVAALL24_43-U-NA20	P	1	107	143	11	7	11
RRU 4449 B71+B85	P	1	107	75	6	3	6
RRU 4415 B25	P	1	107	46	4	2	4

Mounting System (Discrete Appurtenances)

Ev =0.2S_{DS} * D	0.0466 x D	"D" is the dead weight of the mount members.
Eh= rho * Q_E	0.08 x W	"W" total weight of structure above ground

Notes:

1. Wind loads govern over Seismic loads

APPENDIX B - ALL SECTORS

WIRE FRAME AND RENDERED MODELS

SECTOR 1

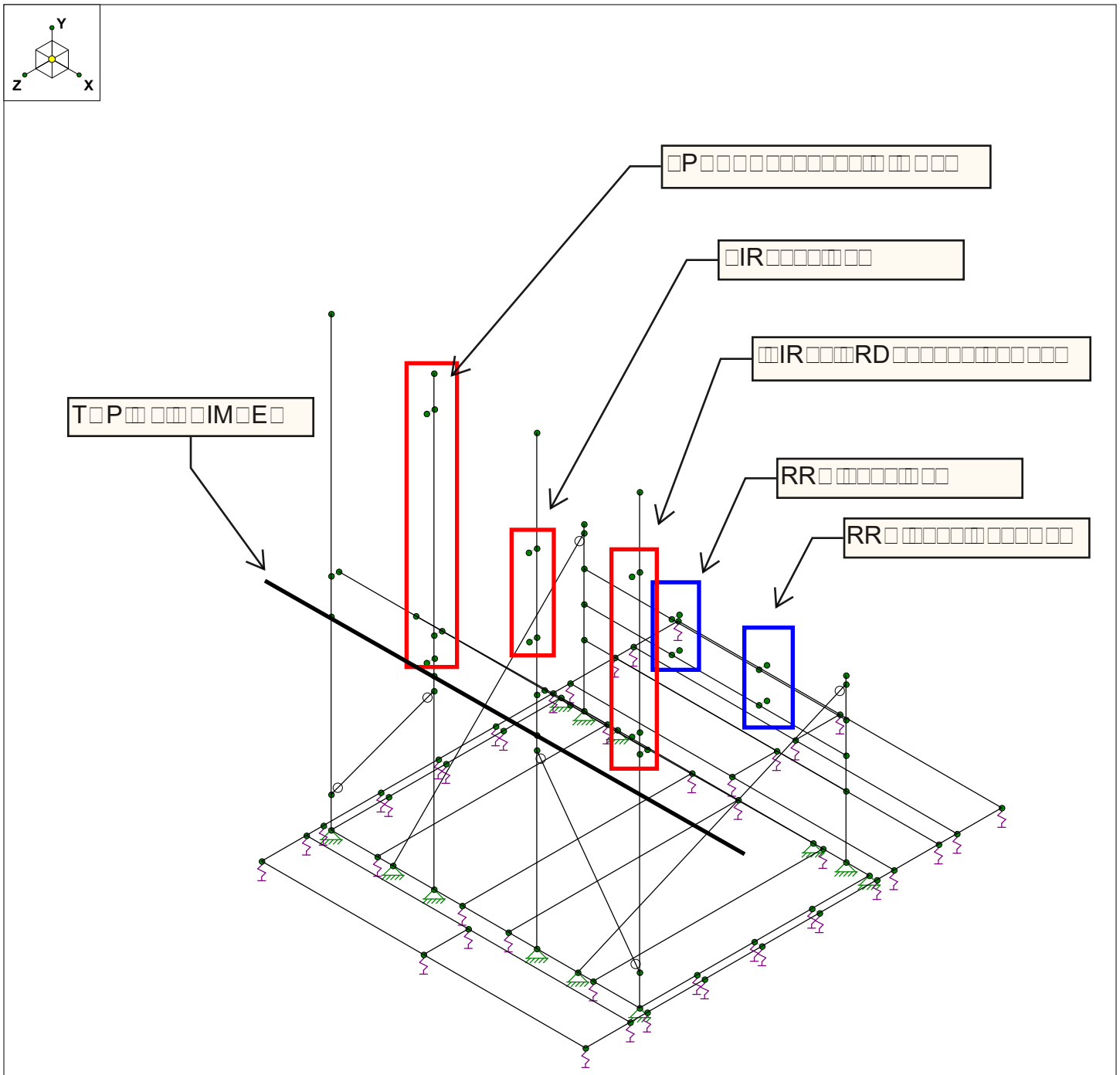

Envelope Only Solution

Tectonic Engineering	Ballast Mount	
RTK		June 3, 2021 at 4:41 PM
10666.023		RTP10-3RRU.r3d

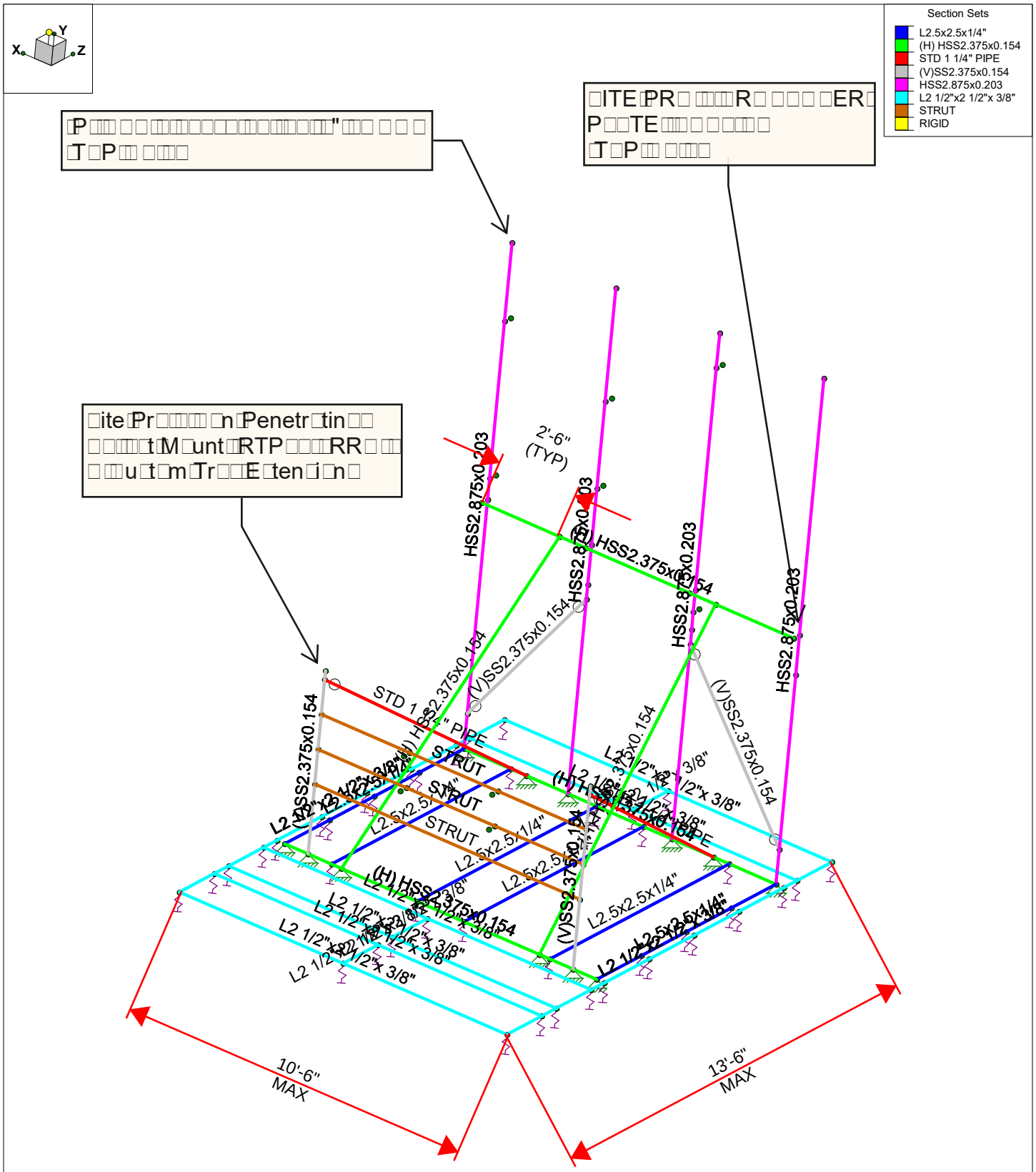

Envelope Only Solution

Tectonic Engineering	Ballast Mount	
RTK		June 3, 2021 at 5:14 PM
10666.023		RTP10-3RRU.r3d

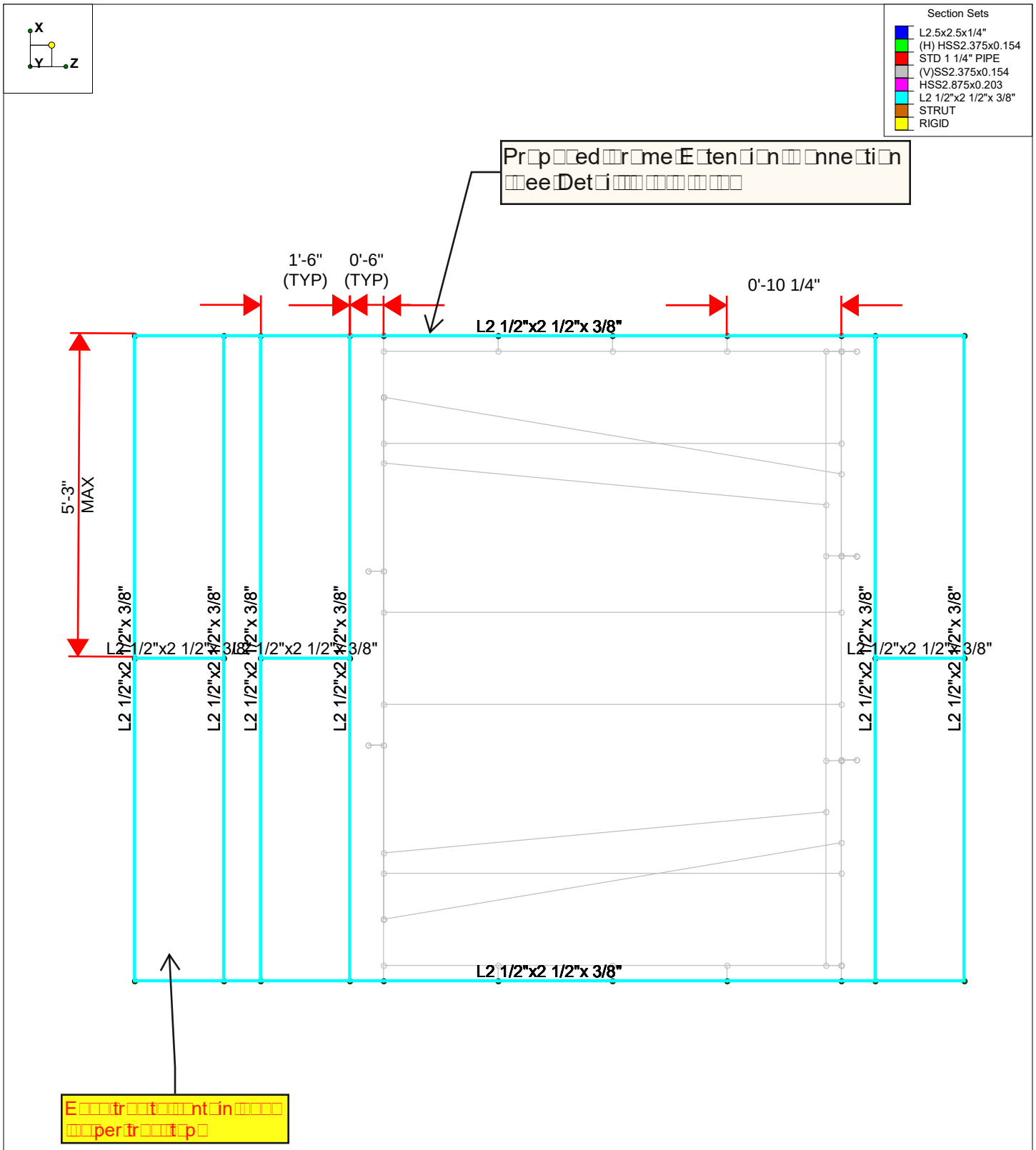

Tectonic Engineering	Ballast Mount	
RTK		June 3, 2021 at 4:30 PM
10666.023		RTP10-3RRU.r3d

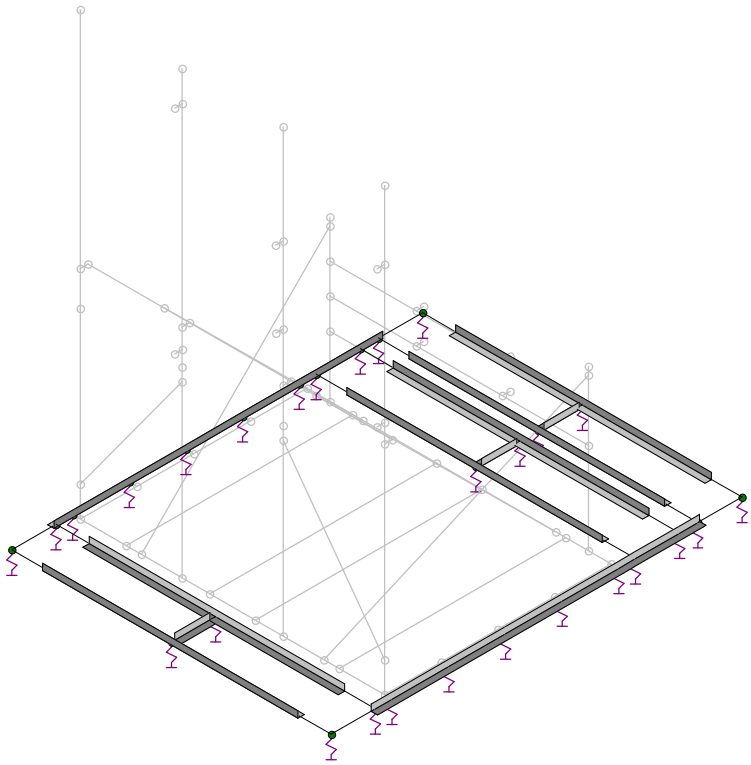

Tectonic Engineering	Ballast Mount	
RTK		June 3, 2021 at 4:30 PM
10666.023		RTP10-3RRU.r3d

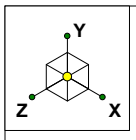

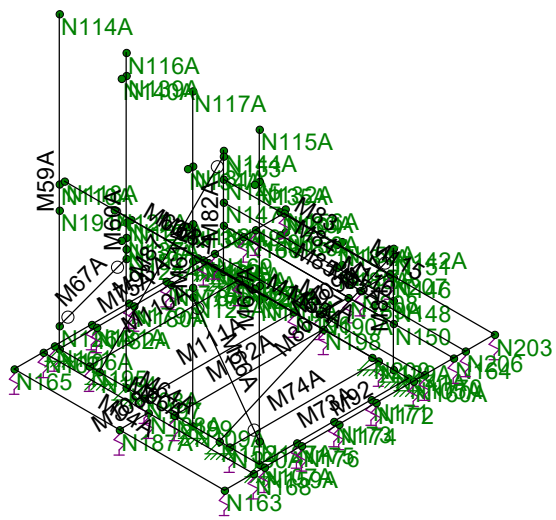

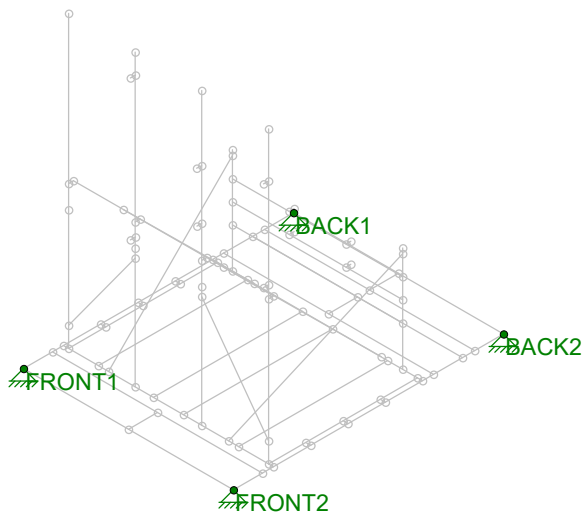

Envelope Only Solution

Tectonic Engineering	Ballast Mount	
RTK		June 3, 2021 at 4:37 PM
10666.023		RTP10-3RRU.r3d

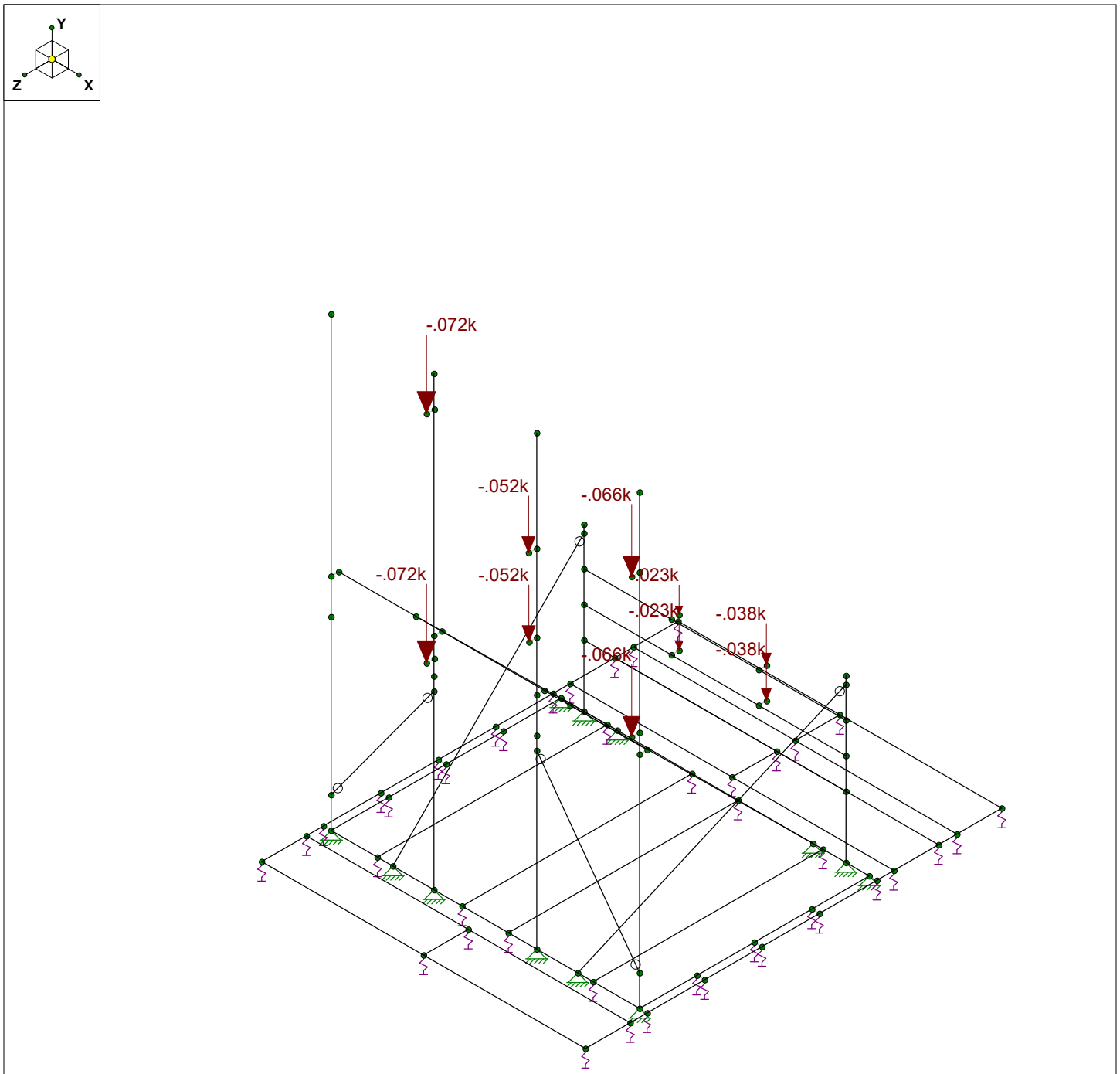

Loads: BLC 1, DL
Envelope Only Solution

Tectonic Engineering	Ballast Mount	
RTK		June 3, 2021 at 4:42 PM
10666.023		RTP10-3RRU.r3d

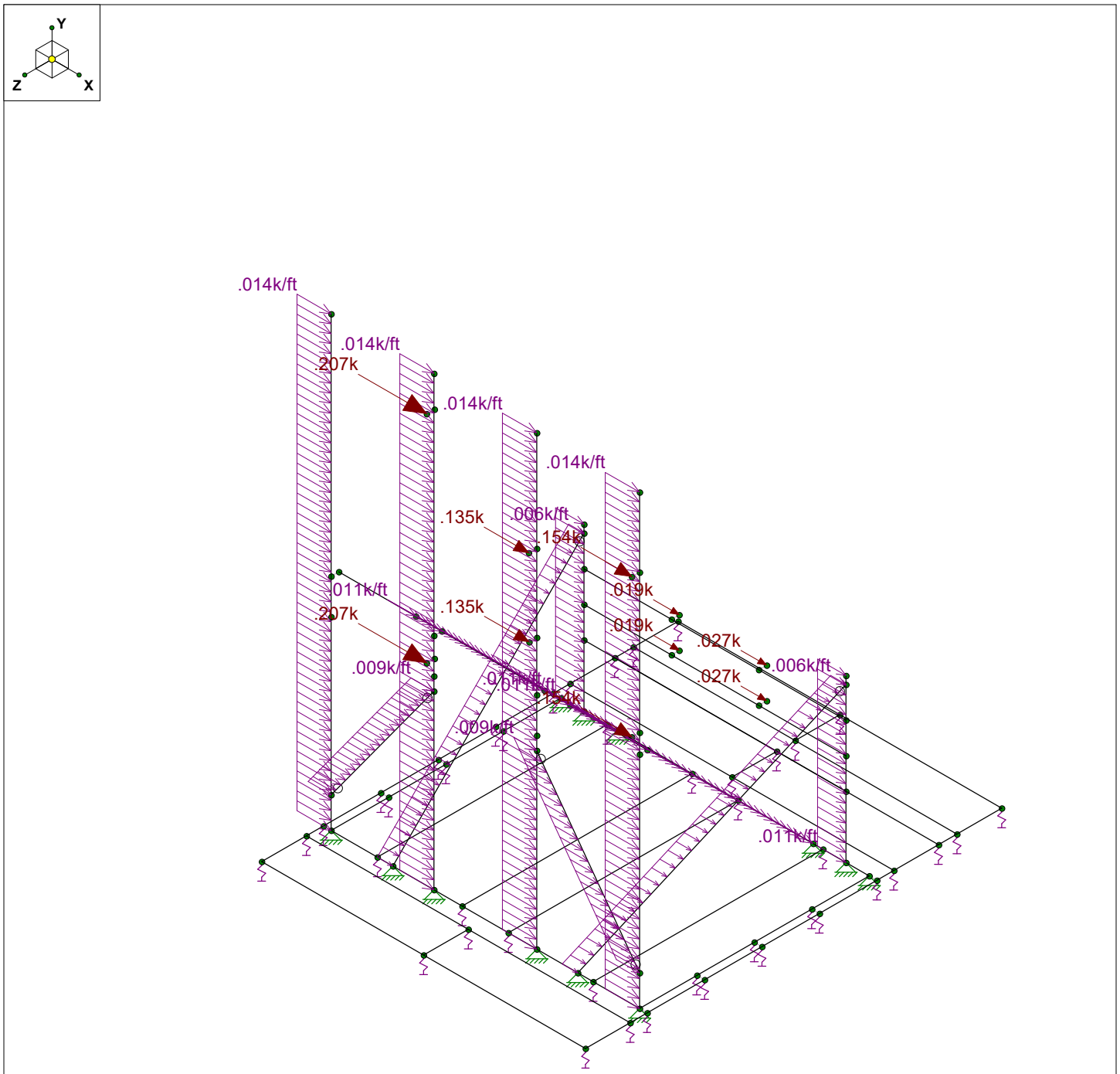

Loads: BLC 2, WLX
Envelope Only Solution

Tectonic Engineering	Ballast Mount	
RTK		June 3, 2021 at 4:42 PM
10666.023		RTP10-3RRU.r3d

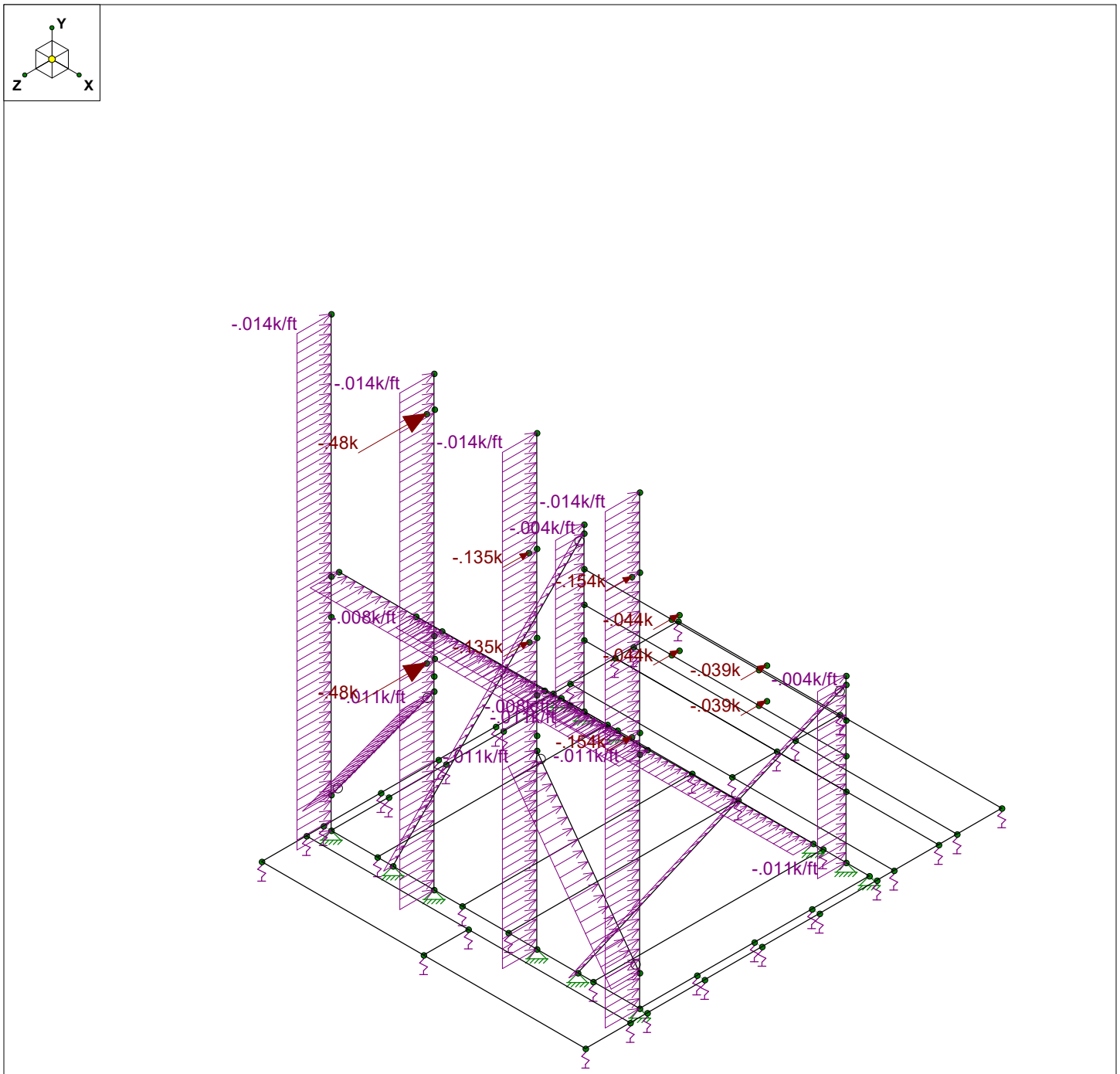

Loads: BLC 3, WLZ
Envelope Only Solution

Tectonic Engineering	Ballast Mount	
RTK		June 3, 2021 at 4:42 PM
10666.023		RTP10-3RRU.r3d

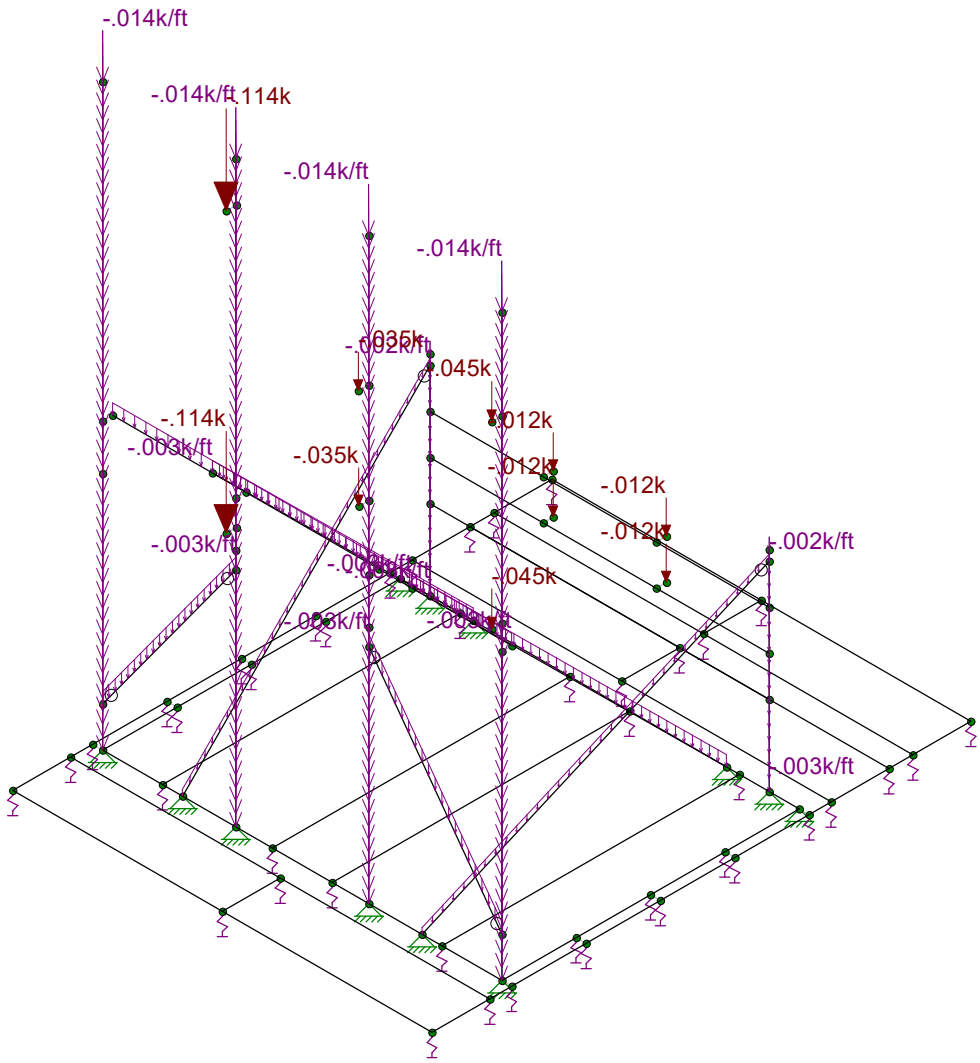

Loads: BLC 4, DLi
Envelope Only Solution

Tectonic Engineering	Ballast Mount	
RTK		June 3, 2021 at 4:43 PM
10666.023		RTP10-3RRU.r3d

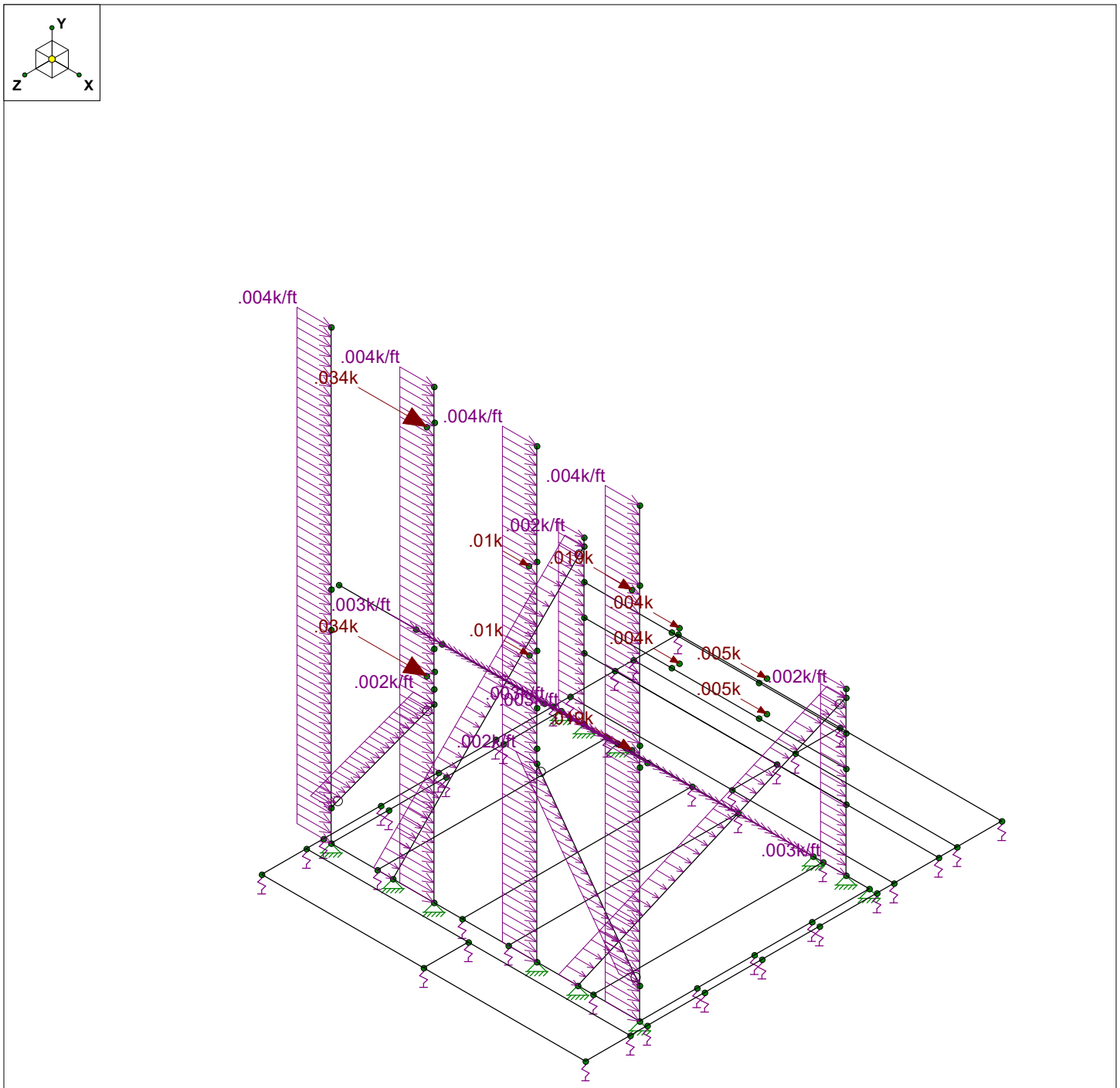

Loads: BLC 5, WLXi
Envelope Only Solution

Tectonic Engineering	Ballast Mount	
RTK		June 3, 2021 at 4:43 PM
10666.023		RTP10-3RRU.r3d

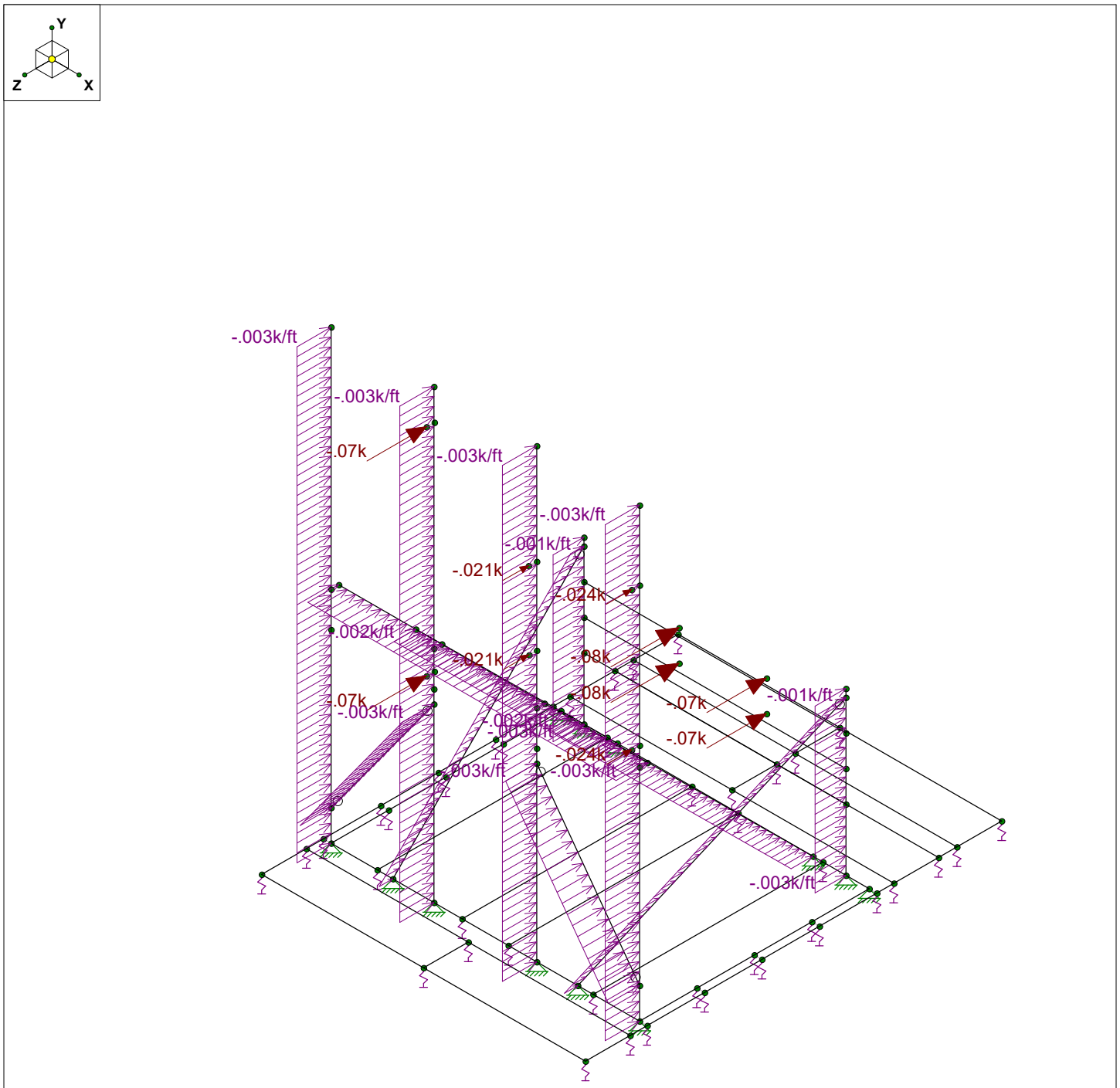

Loads: BLC 6, WLZi
Envelope Only Solution

Tectonic Engineering	Ballast Mount	
RTK		June 3, 2021 at 4:43 PM
10666.023		RTP10-3RRU.r3d

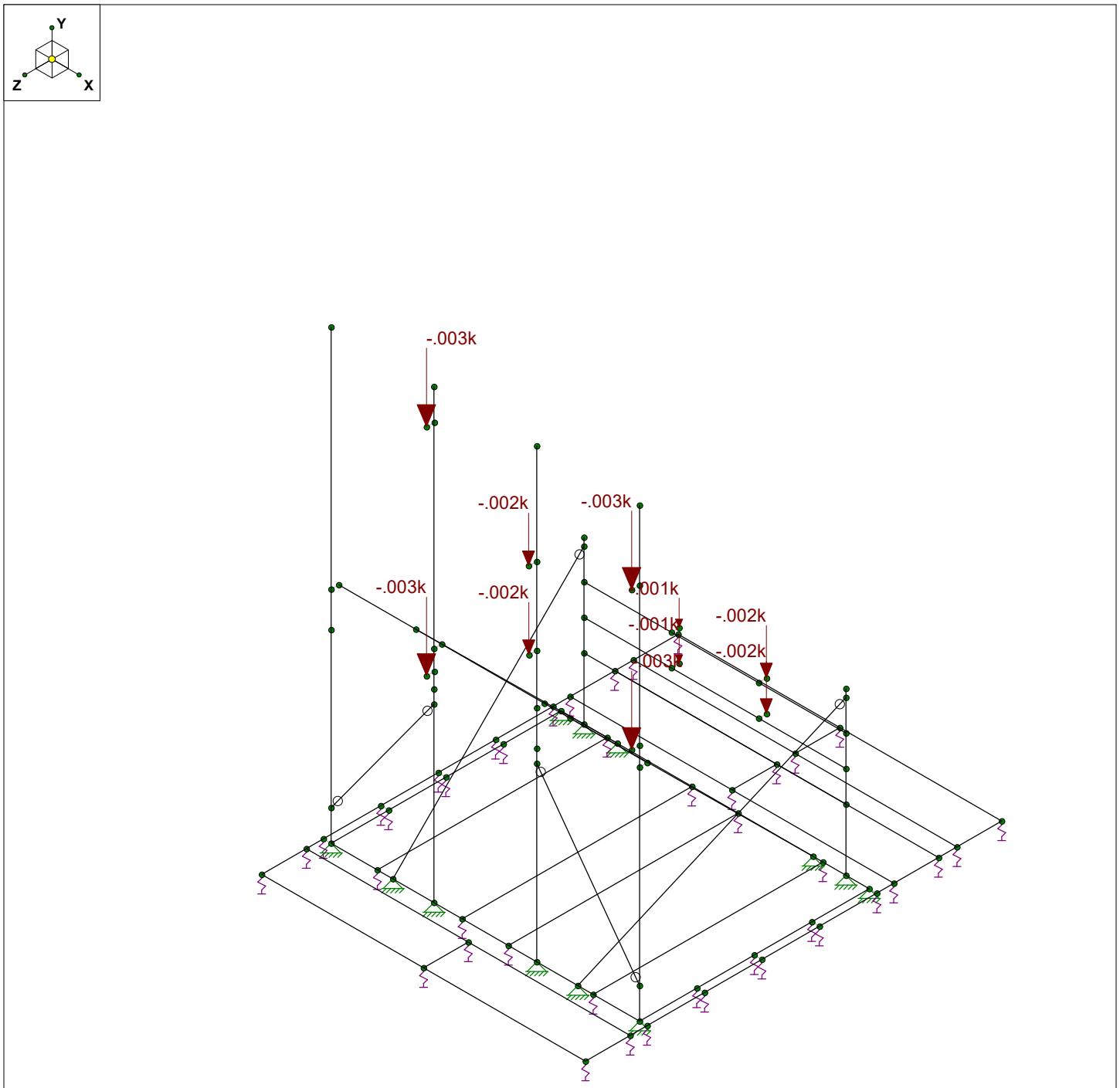

Loads: BLC 7, ELv
Envelope Only Solution

Tectonic Engineering	Ballast Mount	
RTK		June 3, 2021 at 4:43 PM
10666.023		RTP10-3RRU.r3d

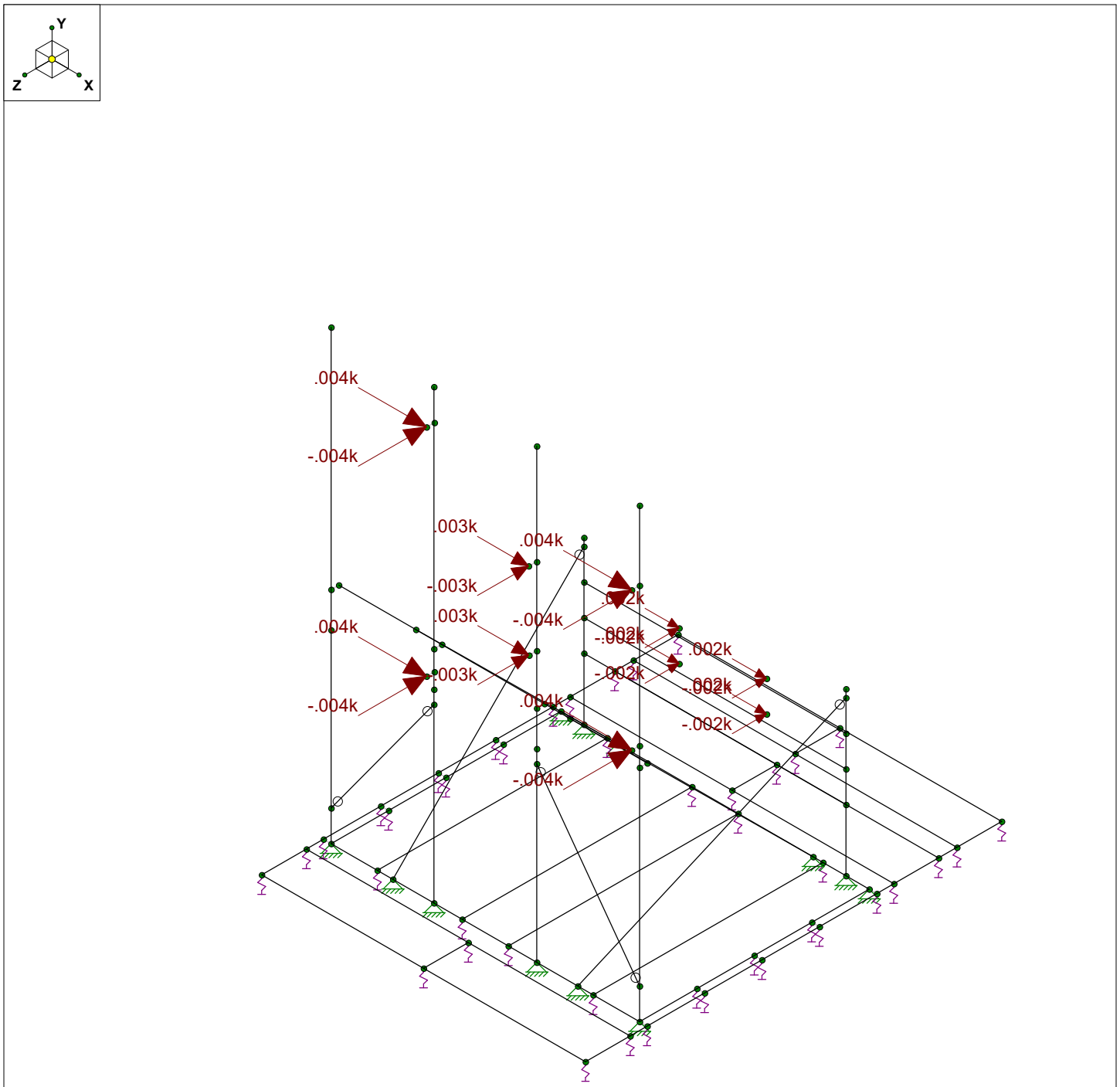

Loads: BLC 8, ELh
Envelope Only Solution

Tectonic Engineering	Ballast Mount	
RTK		June 3, 2021 at 4:43 PM
10666.023		RTP10-3RRU.r3d

SECTOR 2 & 3

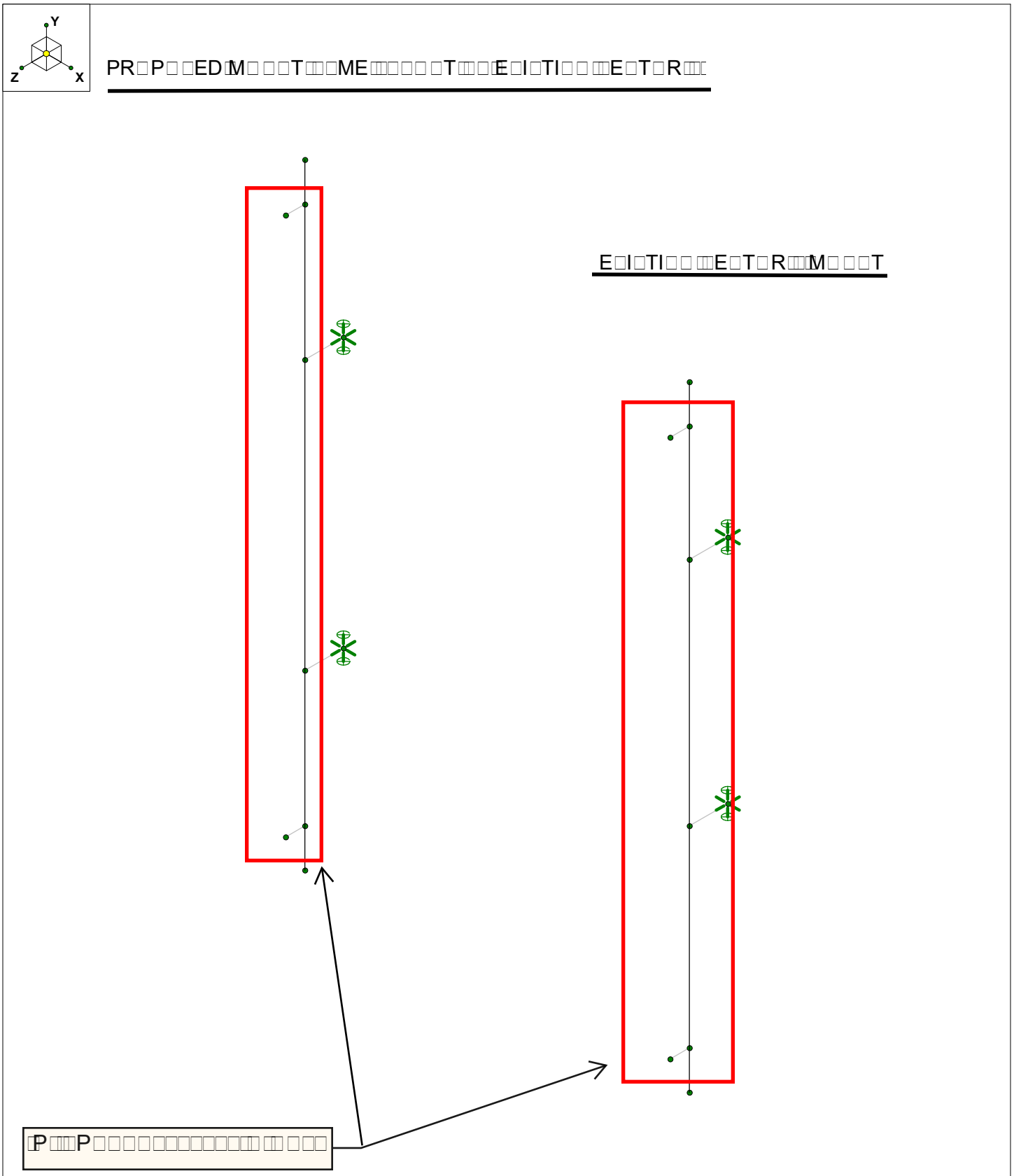

Envelope Only Solution

Tectonic Engineering	All Sectors	
RTK		June 3, 2021 at 2:52 PM
10666.023		Exiting Mount.r3d

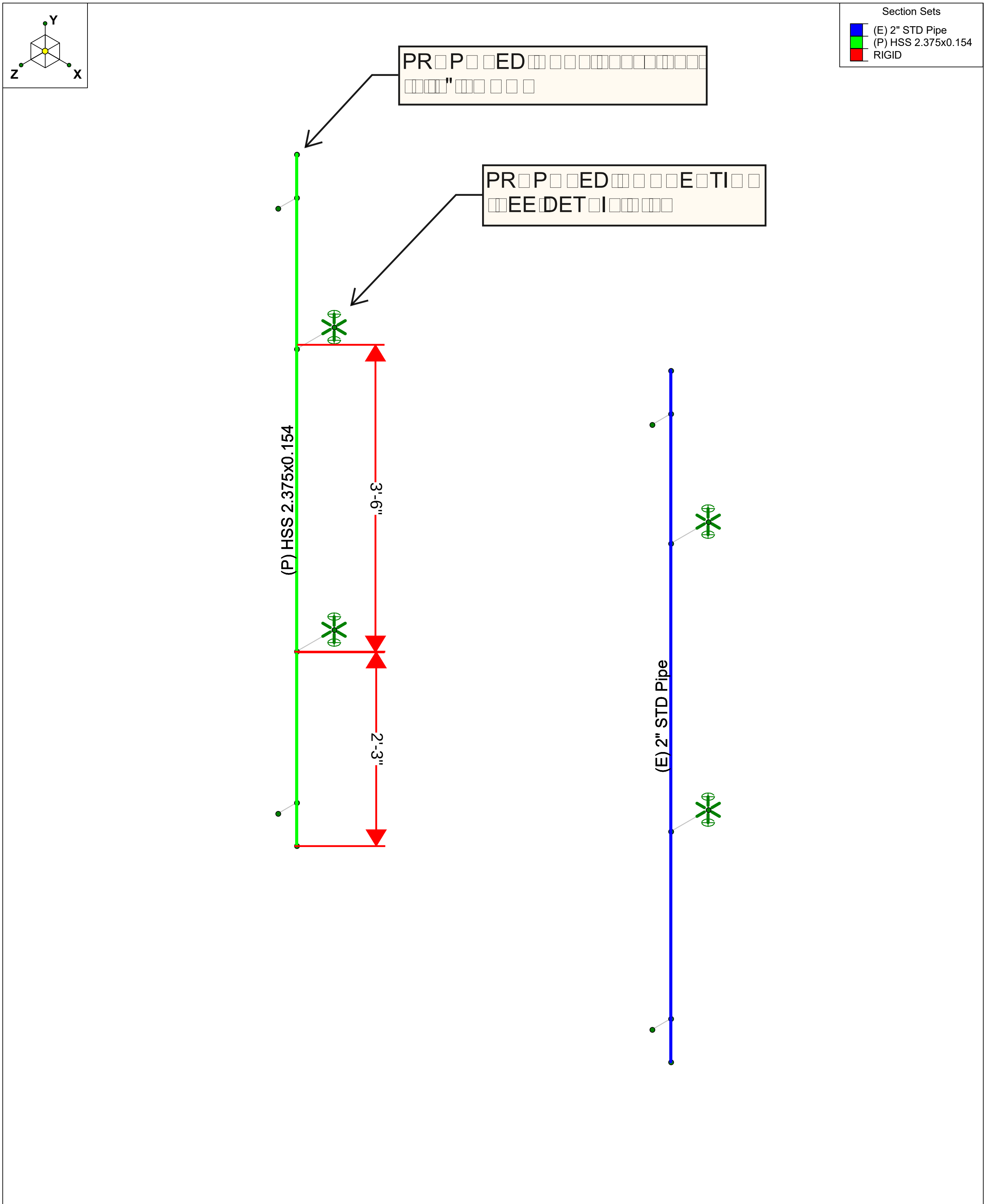

Tectonic Engineering		
RTK	All Sectors	June 4, 2021 at 8:36 AM
10666.023		Exiting Mount.r3d

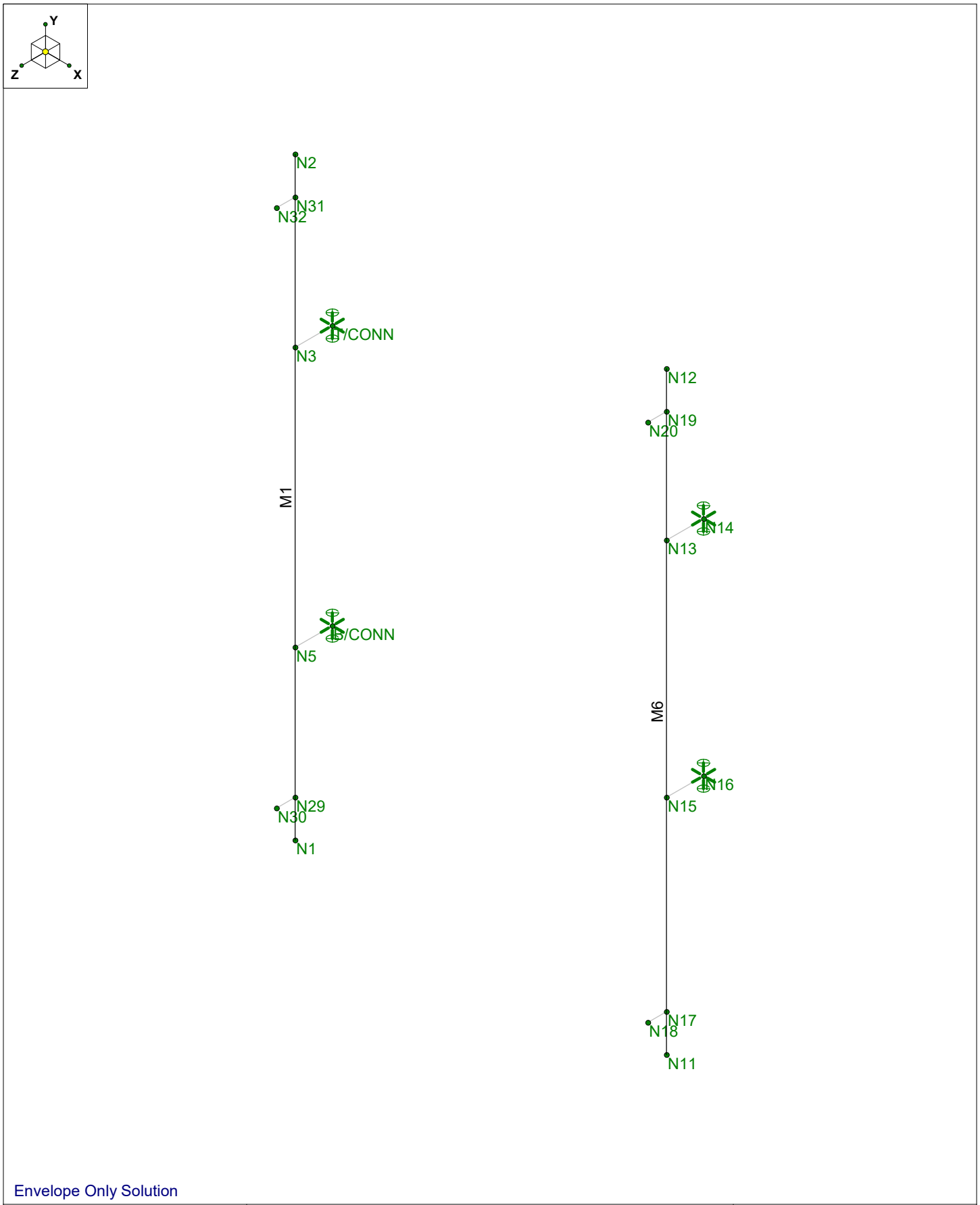

Envelope Only Solution

Tectonic Engineering	All Sectors	
RTK		June 3, 2021 at 2:51 PM
10666.023		Exiting Mount.r3d

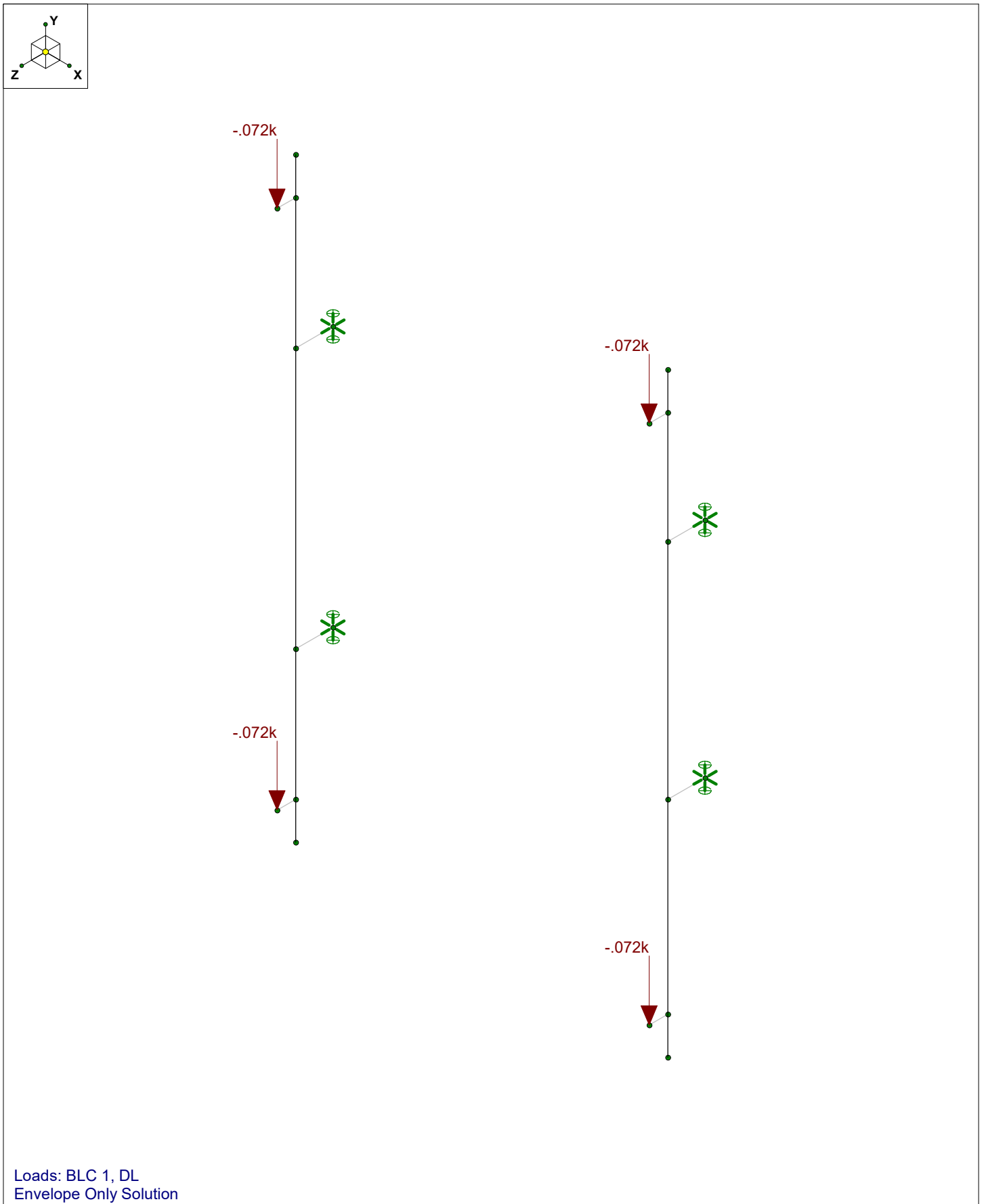

Loads: BLC 1, DL
Envelope Only Solution

Tectonic Engineering	All Sectors	
RTK		June 3, 2021 at 2:52 PM
10666.023		Exiting Mount.r3d

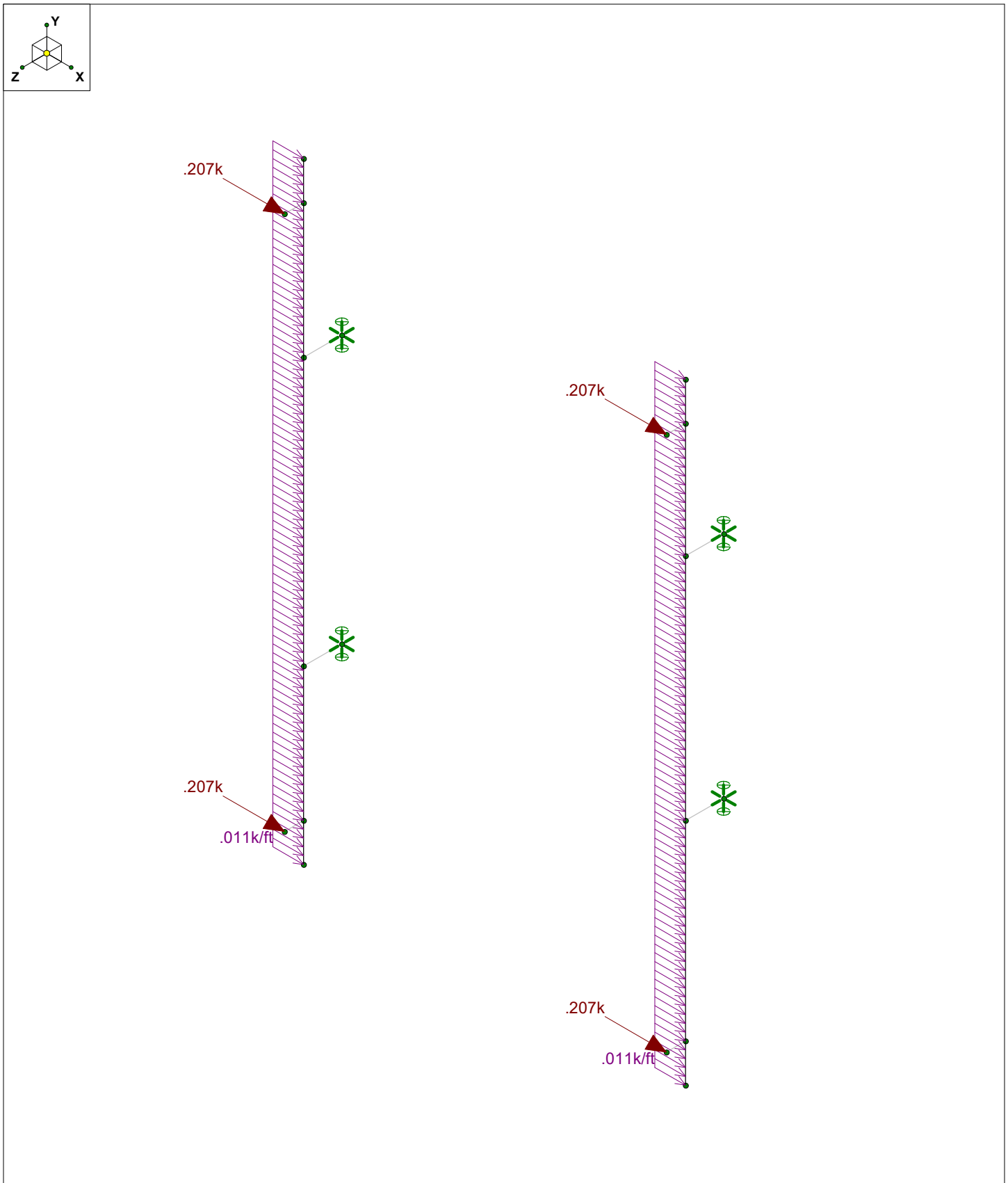

Loads: BLC 2, WLX
Envelope Only Solution

Tectonic Engineering	All Sectors	
RTK		June 3, 2021 at 2:52 PM
10666.023		Exiting Mount.r3d

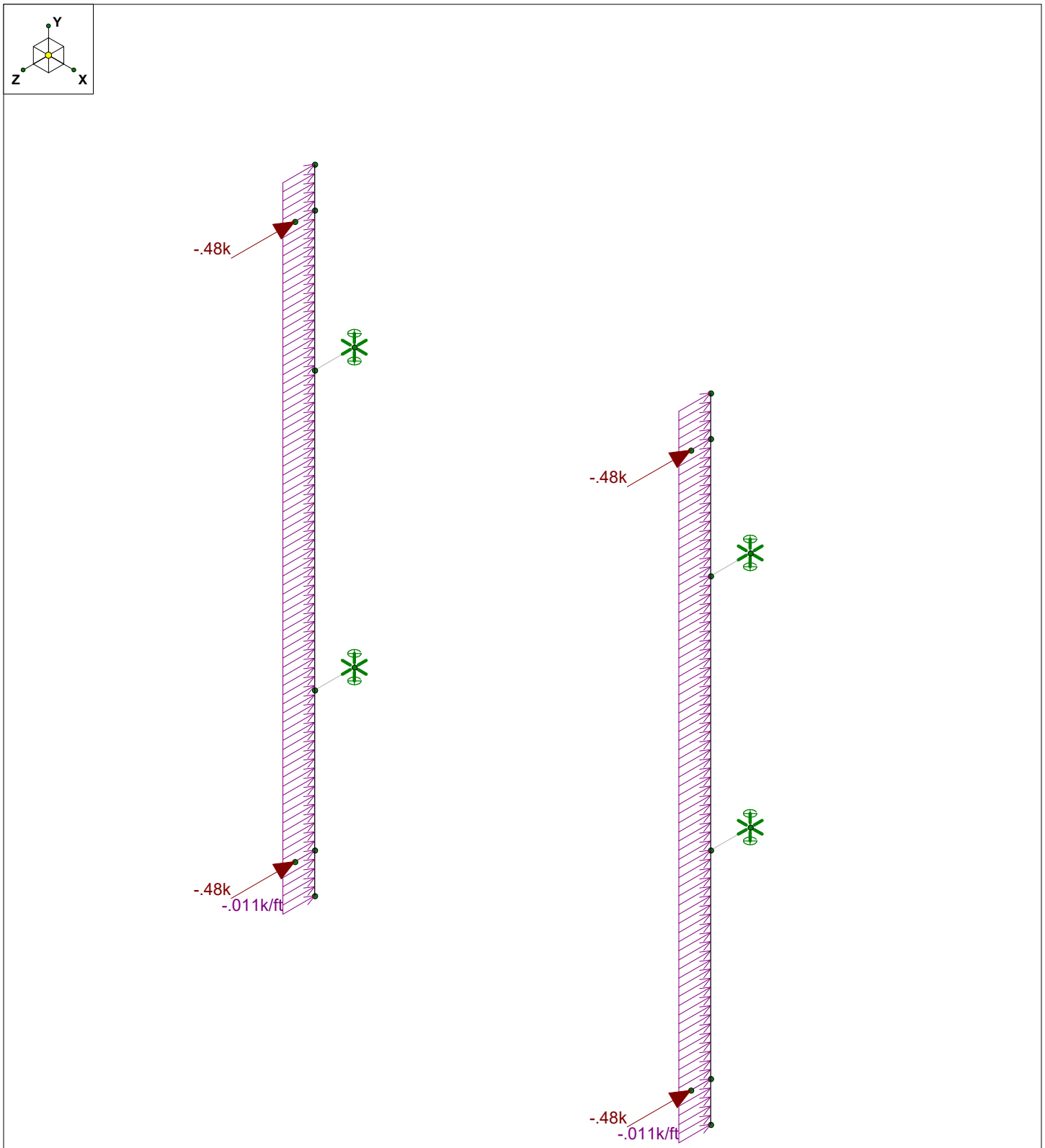

Loads: BLC 3, WLZ
Envelope Only Solution

Tectonic Engineering	All Sectors	
RTK		June 3, 2021 at 2:52 PM
10666.023		Exiting Mount.r3d

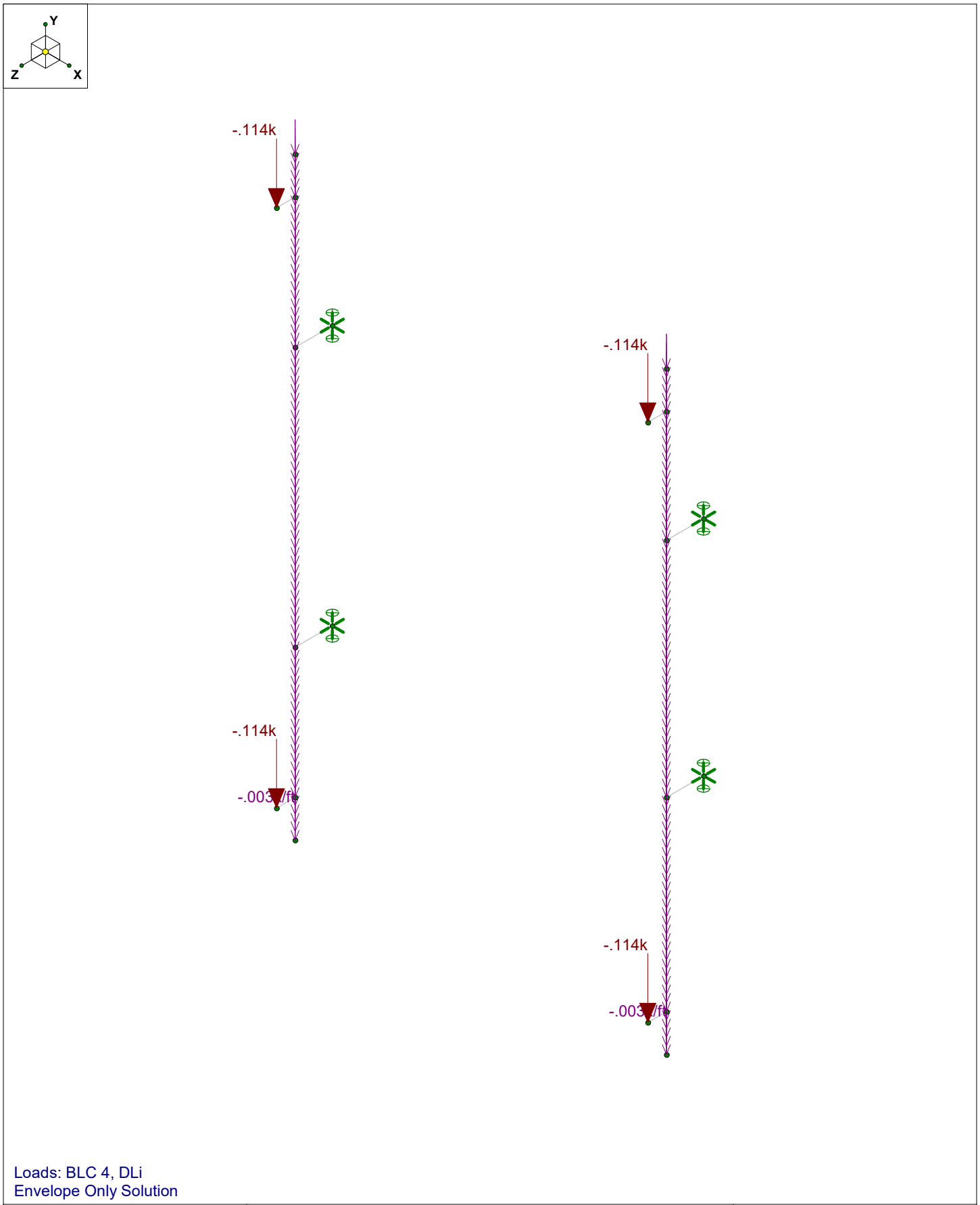

Loads: BLC 4, DLi
Envelope Only Solution

Tectonic Engineering	All Sectors	
RTK		June 3, 2021 at 2:53 PM
10666.023		Exiting Mount.r3d

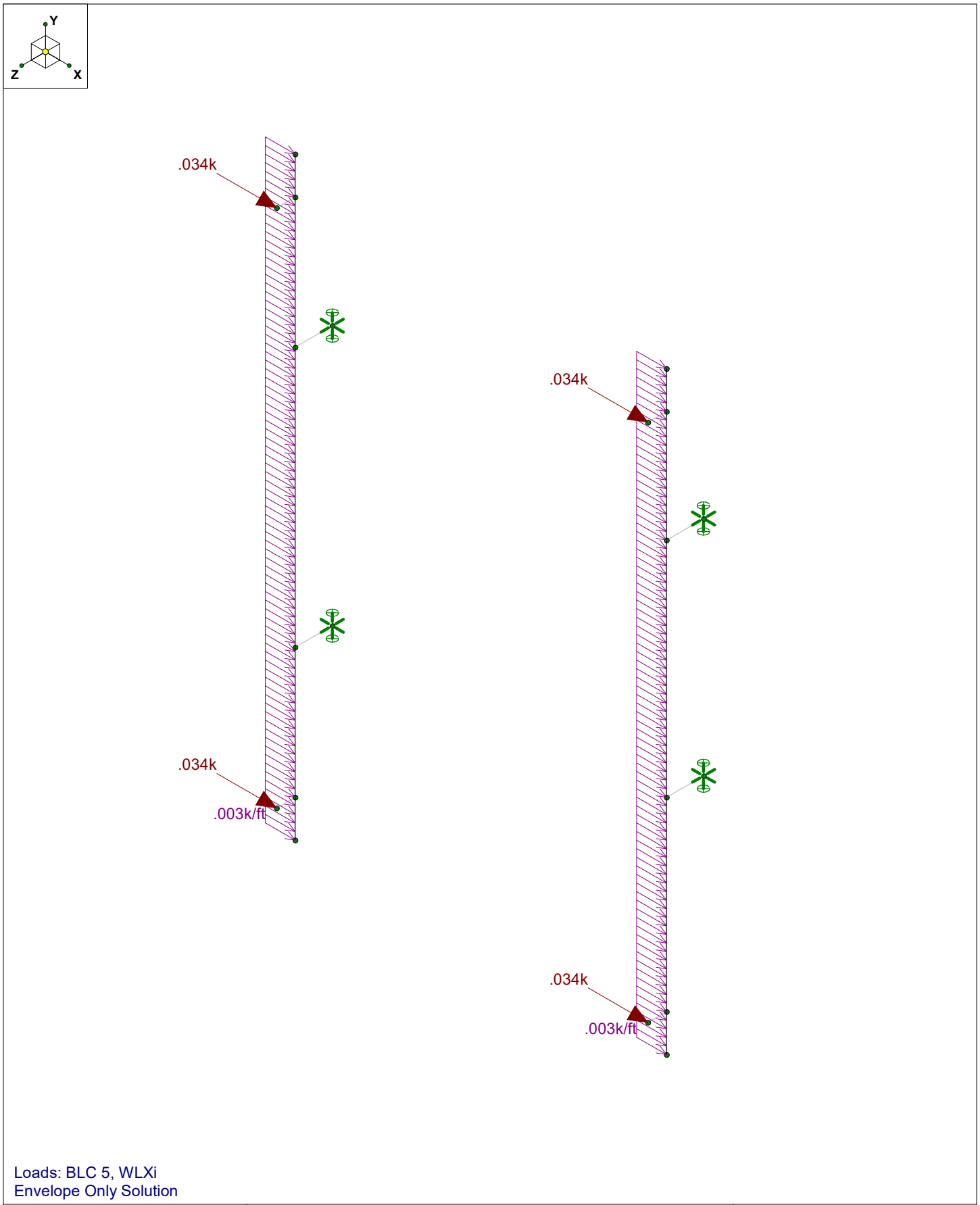

Loads: BLC 5, WLXi
Envelope Only Solution

Tectonic Engineering	All Sectors	
RTK		June 3, 2021 at 2:53 PM
10666.023		Exiting Mount.r3d

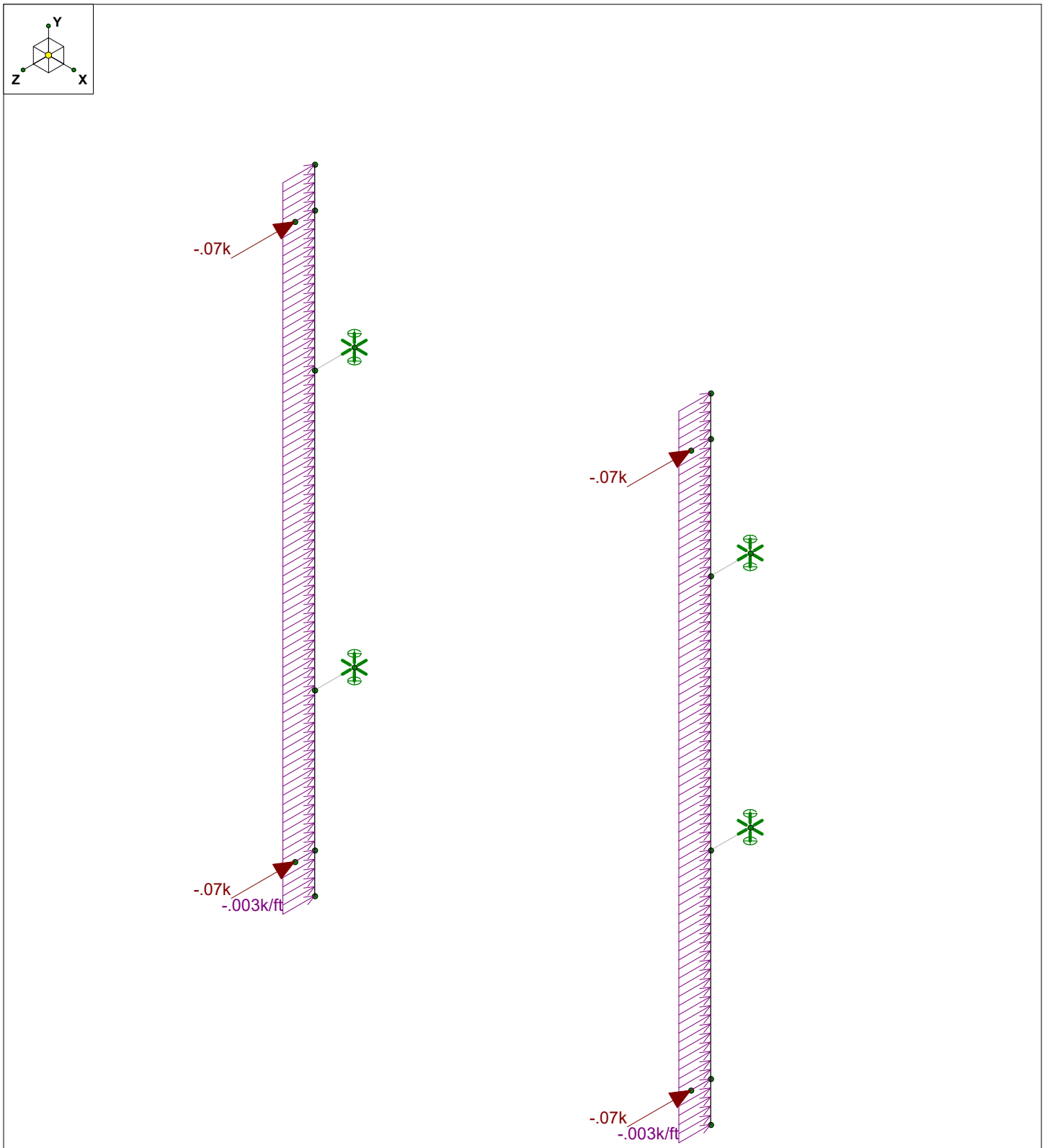

Loads: BLC 6, WLZi
Envelope Only Solution

Tectonic Engineering	All Sectors	
RTK		June 3, 2021 at 2:53 PM
10666.023		Exiting Mount.r3d

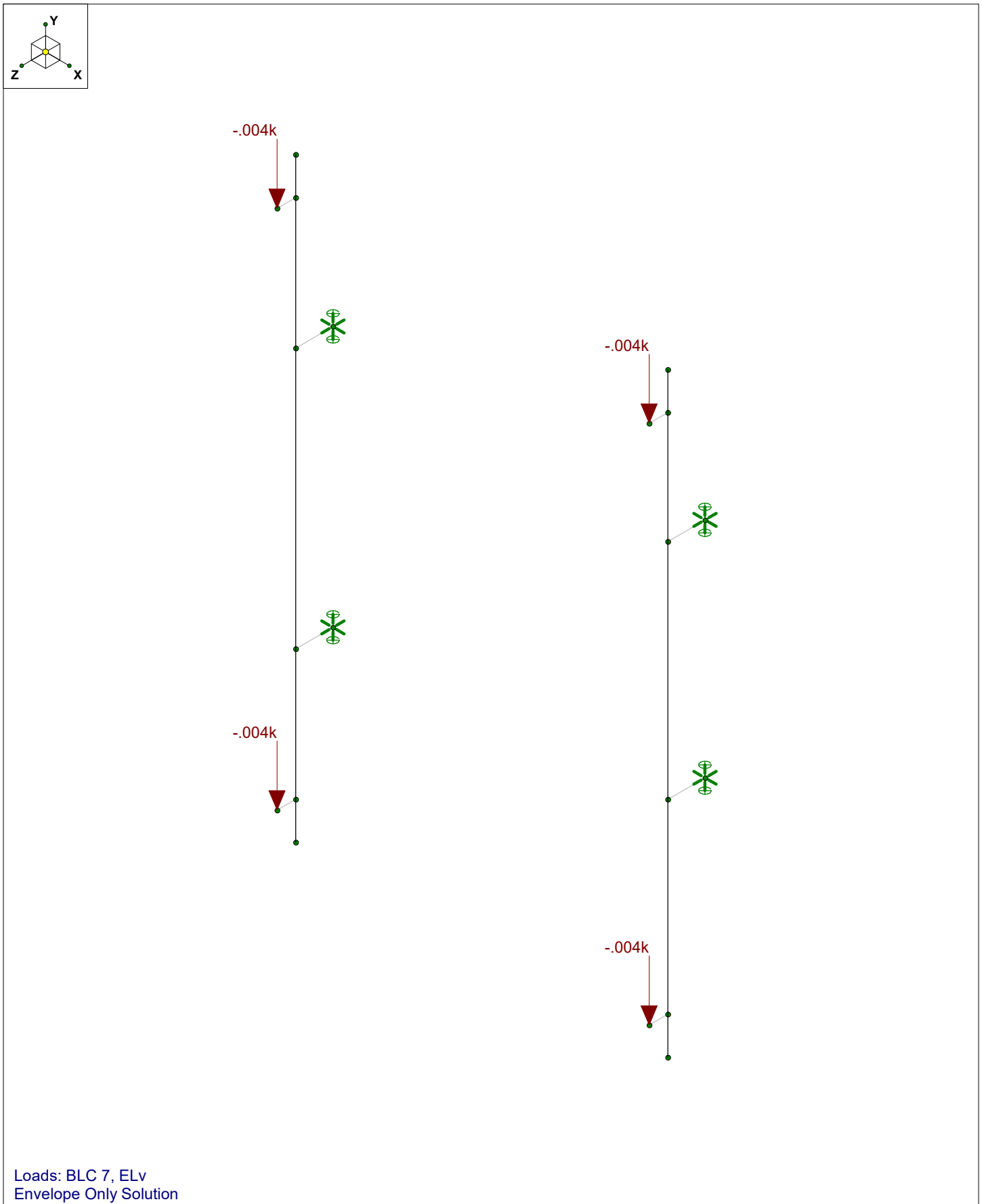

Loads: BLC 7, ELv
Envelope Only Solution

Tectonic Engineering	All Sectors	
RTK		June 3, 2021 at 2:53 PM
10666.023		Exiting Mount.r3d

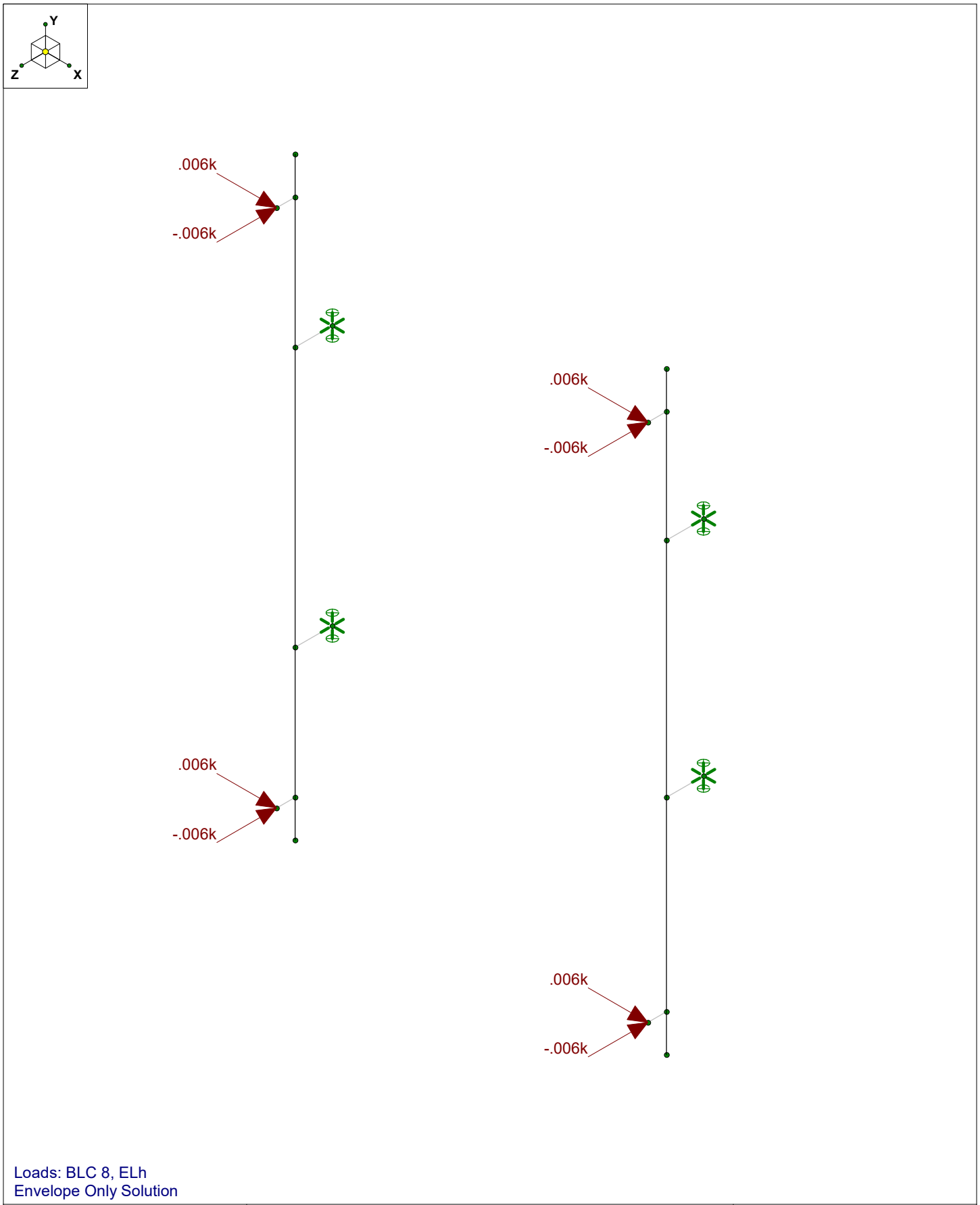

Loads: BLC 8, ELh
Envelope Only Solution

Tectonic Engineering	All Sectors	
RTK		June 3, 2021 at 2:54 PM
10666.023		Exiting Mount.r3d

APPENDIX C

SOFTWARE ANALYSIS OUTPUT

SECTOR 1

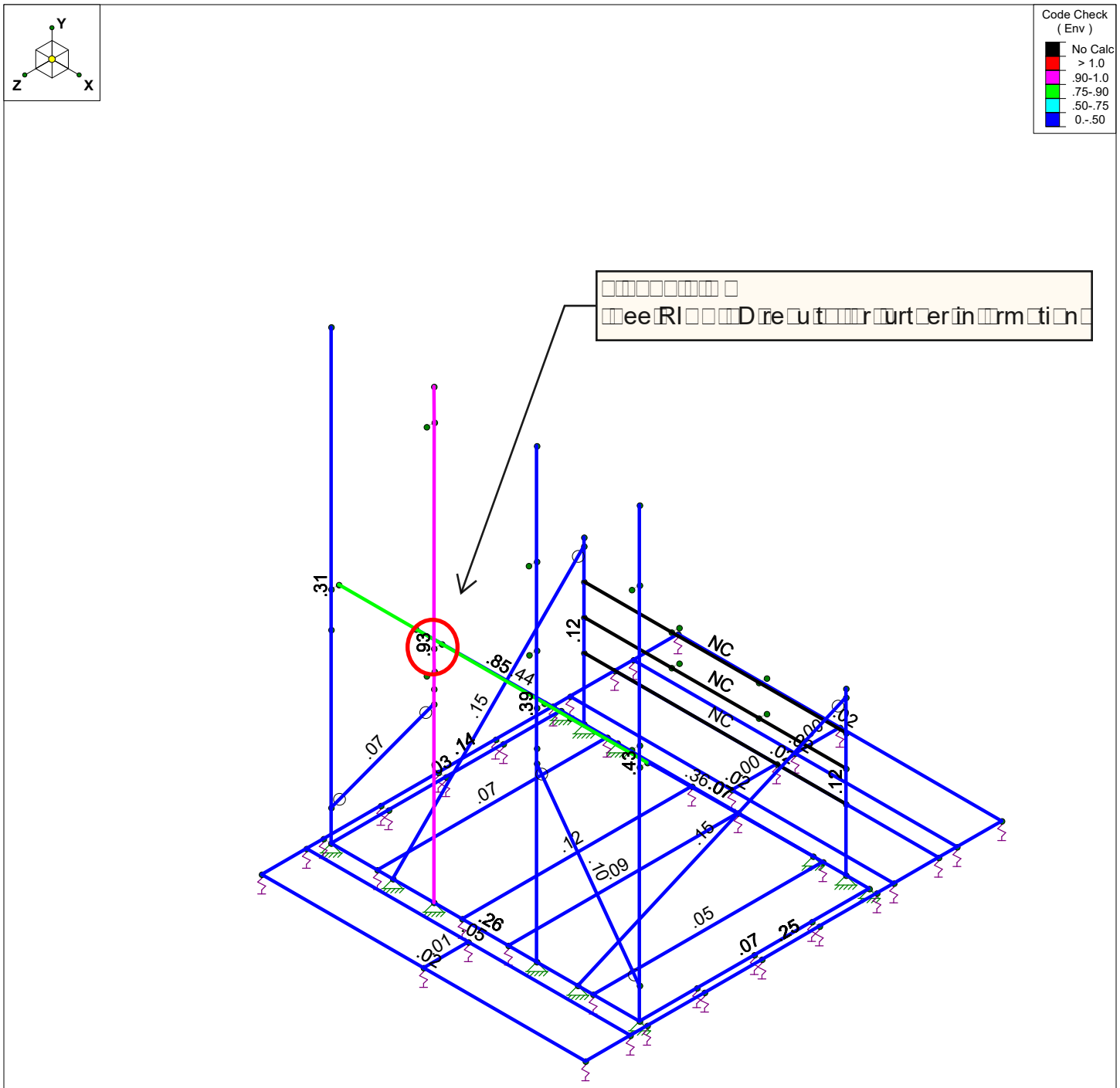

Member Code Checks Displayed (Enveloped)
Envelope Only Solution

Tectonic Engineering	Ballast Mount	
RTK		June 3, 2021 at 4:46 PM
10666.023		RTP10-3RRU.r3d

Load Combinations

	Description	Sol...	PDel...	S...	B...	Fa...	B...	Fa...	B...	Fa...	B...	Fa...	B...	Fa...	B...	Fa...	B...	Fa...	B...	Fa...	B...	Fa...	B...	Fa...	B...	Fa...
1	*LRFD																									
2	1.4D	Yes	Y		1	1.4																				
3	1.2D+(WLX+WLZ) - 0 Deg	Yes	Y		1	1.2	2	1																		
4	1.2D+(WLX+WLZ) - 30 Deg	Yes	Y		1	1.2	2	.866	3	.5																
5	1.2D+(WLX+WLZ) - 60 Deg	Yes	Y		1	1.2	2	.5	3	.866																
6	1.2D+(WLX+WLZ) - 90 Deg	Yes	Y		1	1.2	2		3	1																
7	1.2D+(WLX+WLZ) - 120 Deg	Yes	Y		1	1.2	2	-.5	3	.866																
8	1.2D+(WLX+WLZ) - 150 Deg	Yes	Y		1	1.2	2	-.8...	3	.5																
9	1.2D+(WLX+WLZ) - 180 Deg	Yes	Y		1	1.2	2	-1	3																	
10	1.2D+(WLX+WLZ) - 210 Deg	Yes	Y		1	1.2	2	-.8...	3	-.5																
11	1.2D+(WLX+WLZ) - 240 Deg	Yes	Y		1	1.2	2	-.5	3	-.8...																
12	1.2D+(WLX+WLZ) - 270 Deg	Yes	Y		1	1.2	2		3	-1																
13	1.2D+(WLX+WLZ) - 300 Deg	Yes	Y		1	1.2	2	.5	3	-.8...																
14	1.2D+(WLX+WLZ) - 330 Deg	Yes	Y		1	1.2	2	.866	3	-.5																
15	**Wind Load with Ice**																									
16	1.2D+1.0Di+1.0(WLXi+WLZi) - ...	Yes	Y		1	1.2	4	1	5	1	6															
17	1.2D+1.0Di+1.0(WLXi+WLZi) - ...	Yes	Y		1	1.2	4	1	5	.866	6	.5														
18	1.2D+1.0Di+1.0(WLXi+WLZi) - ...	Yes	Y		1	1.2	4	1	5	.5	6	.866														
19	1.2D+1.0Di+1.0(WLXi+WLZi) - ...	Yes	Y		1	1.2	4	1	5		6	1														
20	1.2D+1.0Di+1.0(WLXi+WLZi) - ...	Yes	Y		1	1.2	4	1	5	-.5	6	.866														
21	1.2D+1.0Di+1.0(WLXi+WLZi) - ...	Yes	Y		1	1.2	4	1	5	-.8...	6	.5														
22	1.2D+1.0Di+1.0(WLXi+WLZi) - ...	Yes	Y		1	1.2	4	1	5	-1	6															
23	1.2D+1.0Di+1.0(WLXi+WLZi) - ...	Yes	Y		1	1.2	4	1	5	-.8...	6	-.5														
24	1.2D+1.0Di+1.0(WLXi+WLZi) - ...	Yes	Y		1	1.2	4	1	5	-.5	6	-.8...														
25	1.2D+1.0Di+1.0(WLXi+WLZi) - ...	Yes	Y		1	1.2	4	1	5		6	-1														
26	1.2D+1.0Di+1.0(WLXi+WLZi) - ...	Yes	Y		1	1.2	4	1	5	.5	6	-.8...														
27	1.2D+1.0Di+1.0(WLXi+WLZi) - ...	Yes	Y		1	1.2	4	1	5	.866	6	-.5														
28	**Seismic Load**																									
29	1.2D+EQv+EQh	Yes	Y		1	1.2	7	1	8	1																
30	**Sliding + Overturn Check**																									
31	0.6WLZ		Y		3	.6																				
32	*ASD		Y		1	1.2	7	1	8	1																
33	D		Y		1	1																				
34	D+(0.6WLX) - 0 Deg		Y		1	1	2	.6																		
35	D+(0.6WLX+0.6WLZ) - 30 Deg		Y		1	1	2	.52	3	.3																
36	D+(0.6WLX+0.6WLZ) - 60 Deg		Y		1	1	2	.3	3	.52																
37	D+(0.6WLZ) - 90 Deg		Y		1	1	2		3	.6																
38	D+(0.6WLX+0.6WLZ) - 120 Deg		Y		1	1	2	-.3	3	.52																
39	D+(0.6WLX+0.6WLZ) - 150 Deg		Y		1	1	2	-.52	3	-.3																
40	D+(0.6WLX+0.6WLZ) - 180 Deg		Y		1	1	2	-.6	3																	
41	D+(0.6WLX+0.6WLZ) - 210 Deg		Y		1	1	2	-.52	3	-.3																
42	D+(0.6WLX+0.6WLZ) - 240 Deg		Y		1	1	2	-.3	3	-.52																
43	D+(0.6WLX+0.6WLZ) - 270 Deg		Y		1	1	2		3	-.6																
44	D+(0.6WLX+0.6WLZ) - 300 Deg		Y		1	1	2	.3	3	-.52																
45	D+(0.6WLX+0.6WLZ) - 330 Deg		Y		1	1	2	.52	3	-.3																
46	**Wind Load with Ice**																									
47	D+0.7Di+0.6(WLXi+WLZi) - 0 D...		Y		1	1	4	.7	5	.6	6															
48	D+0.7Di+0.6(WLXi+WLZi) - 30 ...		Y		1	1	4	.7	5	.52	6	.3														
49	D+0.7Di+0.6(WLXi+WLZi) - 60 ...		Y		1	1	4	.7	5	.3	6	.52														
50	D+0.7Di+0.6(WLXi+WLZi) - 90 ...		Y		1	1	4	.7	5		6	.6														
51	D+0.7Di+0.6(WLXi+WLZi) - 12...		Y		1	1	4	.7	5	-.3	6	.52														

Load Combinations (Continued)

	Description	Sol...	PDel...	S...	B...	Fa...	B...	Fa...	B...	Fa...	B...	Fa...	B...	Fa...	B...	Fa...	B...	Fa...	B...	Fa...	B...	Fa...	B...	Fa...
52	D+0.7Di+0.6(WLXi+WLZi) - 15...		Y		1	1	4	.7	5	-.52	6	.3												
53	D+0.7Di+0.6(WLXi+WLZi) - 18...		Y		1	1	4	.7	5	-.6	6													
54	D+0.7Di+0.6(WLXi+WLZi) - 21...		Y		1	1	4	.7	5	-.52	6	-.3												
55	D+0.7Di+0.6(WLXi+WLZi) - 24...		Y		1	1	4	.7	5	-.3	6	-.52												
56	D+0.7Di+0.6(WLXi+WLZi) - 27...		Y		1	1	4	.7	5		6	-.6												
57	D+0.7Di+0.6(WLXi+WLZi) - 30...		Y		1	1	4	.7	5	.3	6	-.52												
58	D+0.7Di+0.6(WLXi+WLZi) - 33...		Y		1	1	4	.7	5	.52	6	-.3												
59	**Seismic Load**																							
60	D+0.7ELv+0.7ELh		Y		1	1	7	.7	8	.7														

Joint Reactions (By Combination)

	LC	Joint Label	X [k]	Y [k]	Z [k]	MX [k-ft]	MY [k-ft]	MZ [k-ft]
1	31	FRONT2	.286	-.527	.375	0	0	0
2	31	FRONT1	-.335	-.537	.326	0	0	0
3	31	BACK2	-.298	.527	.508	0	0	0
4	31	BACK1	.346	.537	.639	0	0	0
5	31	COG (ft):	NC	NC	NC			

Re□□ti□n□u□ed□t□□□e□□□□□□□t□er□u□□□idin□□nd□□erturnin□

Hot Rolled Steel Properties

	Label	E [ksi]	G [ksi]	Nu	Therm (\1E...	Density[k/ft...	Yield[ksi]	Ry	Fu[ksi]	Rt
1	A36 Gr.36	29000	11154	.3	.65	.49	36	1.5	58	1.2
2	A572 Gr.50	29000	11154	.3	.65	.49	50	1.1	65	1.1
3	A992	29000	11154	.3	.65	.49	50	1.1	65	1.1
4	A500 Gr.42	29000	11154	.3	.65	.49	42	1.4	58	1.3
5	A500 Gr.46	29000	11154	.3	.65	.49	46	1.4	58	1.3
6	A53 Gr. B	29000	11154	.3	.65	.49	36	1.5	58	1.2

Hot Rolled Steel Section Sets

	Label	Shape	Type	Design List	Material	Design R...	A [in2]	Iyy [in4]	Izz [in4]	J [in4]
1	L2.5x2.5x1/4"	L2.5x2.5x4	Beam	Single Angle	A36 Gr.36	Typical	1.19	.692	.692	.026
2	(H) HSS2.375x0.154	HSS2.375X0....	Beam	Pipe	A53 Gr. B	Typical	1	.627	.627	1.25
3	STD 1 1/4" PIPE	PIPE_1.0	VBrace	Pipe	A53 Gr. B	Typical	.469	.083	.083	.166
4	(V)SS2.375x0.154	HSS2.375X0....	Column	Pipe	A53 Gr. B	Typical	1	.627	.627	1.25
5	HSS2.875x0.203	HSS2.875X0....	Column	Pipe	A53 Gr. B	Typical	1.59	1.45	1.45	2.89
6	L2 1/2"x2 1/2"x 3/8"	L2.5x2.5x6	Beam	Single Angle	A53 Gr. B	Typical	1.73	.972	.972	.083

Basic Load Cases

	BLC Description	Category	X Grav...	Y Grav...	Z Gravi...	Joint	Point	Distributed	Area(Member)	Surface(Plate/Wall)
1	DL	DL		-1.05		20				
2	WLX	WLX				20		24		
3	WLZ	WLZ				20		26		
4	DLi	SL				20		26		
5	WLXi	OL1				20		24		
6	WLZi	OL2				20		26		
7	ELv	ELY		-.047		20				
8	ELh	EL	-.08		-.08	40				

Load Combinations

	Description	Sol...	PDel...	S...	B...	Fa...	B...	Fa...	B...	Fa...	B...	Fa...	B...	Fa...	B...	Fa...	B...	Fa...	B...	Fa...	B...	Fa...	B...	Fa...	B...	Fa...
1	*LRFD																									
2	1.4D	Yes	Y		1	1.4																				
3	1.2D+(WLX+WLZ) - 0 Deg	Yes	Y		1	1.2	2	1																		
4	1.2D+(WLX+WLZ) - 30 Deg	Yes	Y		1	1.2	2	.866	3	.5																
5	1.2D+(WLX+WLZ) - 60 Deg	Yes	Y		1	1.2	2	.5	3	.866																
6	1.2D+(WLX+WLZ) - 90 Deg	Yes	Y		1	1.2	2		3	1																
7	1.2D+(WLX+WLZ) - 120 Deg	Yes	Y		1	1.2	2	-.5	3	.866																
8	1.2D+(WLX+WLZ) - 150 Deg	Yes	Y		1	1.2	2	-.8...	3	.5																
9	1.2D+(WLX+WLZ) - 180 Deg	Yes	Y		1	1.2	2	-1	3																	
10	1.2D+(WLX+WLZ) - 210 Deg	Yes	Y		1	1.2	2	-.8...	3	-.5																
11	1.2D+(WLX+WLZ) - 240 Deg	Yes	Y		1	1.2	2	-.5	3	-.8...																
12	1.2D+(WLX+WLZ) - 270 Deg	Yes	Y		1	1.2	2		3	-1																
13	1.2D+(WLX+WLZ) - 300 Deg	Yes	Y		1	1.2	2	.5	3	-.8...																
14	1.2D+(WLX+WLZ) - 330 Deg	Yes	Y		1	1.2	2	.866	3	-.5																
15	**Wind Load with Ice**																									
16	1.2D+1.0Di+1.0(WLXi+WLZi) - ...	Yes	Y		1	1.2	4	1	5	1	6															
17	1.2D+1.0Di+1.0(WLXi+WLZi) - ...	Yes	Y		1	1.2	4	1	5	.866	6	.5														

Load Combinations (Continued)

	Description	Sol...	P...	Del...	S...	B...	Fa...	B...	Fa...	B...	Fa...	B...	Fa...	B...	Fa...	B...	Fa...	B...	Fa...	B...	Fa...	B...	Fa...	B...	Fa...
18	1.2D+1.0Di+1.0(WLXi+WLZi) - ...	Yes	Y			1	1.2	4	1	5	.5	6	.866												
19	1.2D+1.0Di+1.0(WLXi+WLZi) - ...	Yes	Y			1	1.2	4	1	5		6	1												
20	1.2D+1.0Di+1.0(WLXi+WLZi) - ...	Yes	Y			1	1.2	4	1	5	-.5	6	.866												
21	1.2D+1.0Di+1.0(WLXi+WLZi) - ...	Yes	Y			1	1.2	4	1	5	-.8...	6	.5												
22	1.2D+1.0Di+1.0(WLXi+WLZi) - ...	Yes	Y			1	1.2	4	1	5	-1	6													
23	1.2D+1.0Di+1.0(WLXi+WLZi) - ...	Yes	Y			1	1.2	4	1	5	-.8...	6	-.5												
24	1.2D+1.0Di+1.0(WLXi+WLZi) - ...	Yes	Y			1	1.2	4	1	5	-.5	6	-.8...												
25	1.2D+1.0Di+1.0(WLXi+WLZi) - ...	Yes	Y			1	1.2	4	1	5		6	-1												
26	1.2D+1.0Di+1.0(WLXi+WLZi) - ...	Yes	Y			1	1.2	4	1	5	.5	6	-.8...												
27	1.2D+1.0Di+1.0(WLXi+WLZi) - ...	Yes	Y			1	1.2	4	1	5	.866	6	-.5												
28	**Seismic Load**																								
29	1.2D+ELv+ELh	Yes	Y			1	1.2	7	1	8	1														
30	**Sliding + Overturn Check**																								
31	0.6WLZ		Y			3	.6																		
32	*ASD		Y			1	1.2	7	1	8	1														
33	D		Y			1	1																		
34	D+(0.6WLX) - 0 Deg		Y			1	1	2	.6																
35	D+(0.6WLX+0.6WLZ) - 30 Deg		Y			1	1	2	.52	3	.3														
36	D+(0.6WLX+0.6WLZ) - 60 Deg		Y			1	1	2	.3	3	.52														
37	D+(0.6WLZ) - 90 Deg		Y			1	1	2		3	.6														
38	D+(0.6WLX+0.6WLZ) - 120 Deg		Y			1	1	2	-.3	3	.52														
39	D+(0.6WLX+0.6WLZ) - 150 Deg		Y			1	1	2	-.52	3	-.3														
40	D+(0.6WLX+0.6WLZ) - 180 Deg		Y			1	1	2	-.6	3															
41	D+(0.6WLX+0.6WLZ) - 210 Deg		Y			1	1	2	-.52	3	-.3														
42	D+(0.6WLX+0.6WLZ) - 240 Deg		Y			1	1	2	-.3	3	-.52														
43	D+(0.6WLX+0.6WLZ) - 270 Deg		Y			1	1	2		3	-.6														
44	D+(0.6WLX+0.6WLZ) - 300 Deg		Y			1	1	2	.3	3	-.52														
45	D+(0.6WLX+0.6WLZ) - 330 Deg		Y			1	1	2	.52	3	-.3														
46	**Wind Load with Ice**																								
47	D+0.7Di+0.6(WLXi+WLZi) - 0 D...		Y			1	1	4	.7	5	.6	6													
48	D+0.7Di+0.6(WLXi+WLZi) - 30 ...		Y			1	1	4	.7	5	.52	6	.3												
49	D+0.7Di+0.6(WLXi+WLZi) - 60 ...		Y			1	1	4	.7	5	.3	6	.52												
50	D+0.7Di+0.6(WLXi+WLZi) - 90 ...		Y			1	1	4	.7	5		6	.6												
51	D+0.7Di+0.6(WLXi+WLZi) - 12...		Y			1	1	4	.7	5	-.3	6	.52												
52	D+0.7Di+0.6(WLXi+WLZi) - 15...		Y			1	1	4	.7	5	-.52	6	.3												
53	D+0.7Di+0.6(WLXi+WLZi) - 18...		Y			1	1	4	.7	5	-.6	6													
54	D+0.7Di+0.6(WLXi+WLZi) - 21...		Y			1	1	4	.7	5	-.52	6	-.3												
55	D+0.7Di+0.6(WLXi+WLZi) - 24...		Y			1	1	4	.7	5	-.3	6	-.52												
56	D+0.7Di+0.6(WLXi+WLZi) - 27...		Y			1	1	4	.7	5		6	-.6												
57	D+0.7Di+0.6(WLXi+WLZi) - 30...		Y			1	1	4	.7	5	.3	6	-.52												
58	D+0.7Di+0.6(WLXi+WLZi) - 33...		Y			1	1	4	.7	5	.52	6	-.3												
59	**Seismic Load**																								
60	D+0.7ELv+0.7ELh		Y			1	1	7	.7	8	.7														

Envelope AISC 15th(360-16): LRFD Steel Code Checks

	Member	Shape	Code C...	Loc[ft]	LC	Shear ...	Loc[ft]	Dir	LC	phi*Pnc [k]	phi*Pnt [k]	phi*Mn y-...	phi*Mn z-...	Cb	Eqn
1	M60A	HSS2.875X0...	.927	7.25	12	.087	7.401		7	10.82	51.516	3.699	3.699	4....	H1-1b
2	M63A	HSS2.375X0...	.853	6.667	13	.613	7.5		12	9.837	32.4	1.925	1.925	2....	H3-6
3	M68A	HSS2.375X0...	.443	0	6	.021	0		11	9.526	32.4	1.925	1.925	2....	H1-1a
4	M62A	HSS2.875X0...	.429	14.5	3	.174	14.5		11	10.82	51.516	3.699	3.699	1....	H1-1a

Envelope AISC 15th(360-16): LRFD Steel Code Checks (Continued)

	Member	Shape	Code C...	Loc[ft]	LC	Shear ...	Loc[ft]	Dir	LC	phi*Pnc [k]	phi*Pnt [k]	phi*Mn y-...	phi*Mn z-...	Cb	Eqn
5	M61A	HSS2.875X0...	.387	9.063	10	.084	8.911		4	10.82	51.516	3.699	3.699	1....	H1-1a
6	M113A	HSS2.375X0...	.359	0	6	.039	0		12	9.524	32.4	1.925	1.925	2....	H1-1a
7	M59A	HSS2.875X0...	.314	14.5	9	.085	14.5		14	10.82	51.516	3.699	3.699	2....	H1-1b
8	M64A	HSS2.375X0...	.262	0	9	.114	3.438		6	9.837	32.4	1.925	1.925	4....	H1-1b
9	M92	L2.5x2.5x6	.249	2.109	5	.081	1.547	y	3	3.445	56.052	1.512	3.537	4....	H2-1
10	M87	PIPE_1.0	.149	9.059	9	.018	9.059		4	1.587	15.196	.478	.478	1....	H1-1b
11	M86	PIPE_1.0	.149	9.059	3	.018	9.059		8	1.587	15.196	.478	.478	1....	H1-1b
12	M93A	L2.5x2.5x6	.137	1.969	3	.083	1.547	z	9	3.445	56.052	1.512	3.537	4....	H2-1
13	M82A	HSS2.375X0...	.122	0	9	.108	2.023		25	23.218	32.4	1.925	1.925	2....	H1-1b
14	M81	HSS2.375X0...	.119	0	9	.105	2.023		25	23.218	32.4	1.925	1.925	2....	H1-1b
15	M111A	L2.5x2.5x4	.117	0	6	.004	0	y	6	7.815	38.556	1.114	2.413	2....	H2-1
16	M66A	HSS2.375X0...	.096	5.664	3	.017	0		4	21.982	32.4	1.925	1.925	1....	H1-1b*
17	M112A	L2.5x2.5x4	.086	0	6	.003	0	z	6	7.815	38.556	1.114	2.432	2....	H2-1
18	M67A	HSS2.375X0...	.074	5.667	9	.019	0		11	21.976	32.4	1.925	1.925	1....	H1-1b*
19	M73A	L2.5x2.5x4	.073	0	11	.013	0	y	4	7.815	38.556	1.114	2.483	2....	H2-1
20	M110A	L2.5x2.5x4	.069	0	6	.003	0	y	7	7.815	38.556	1.114	2.428	2....	H2-1
21	M65A	HSS2.375X0...	.067	8.229	9	.080	1.563		7	9.837	32.4	1.925	1.925	3....	H1-1b
22	M96A	L2.5x2.5x6	.051	5.25	11	.003	5.25	y	9	5.696	56.052	1.512	3.017	1....	H2-1
23	M74A	L2.5x2.5x4	.045	2.716	11	.003	0	y	4	7.815	38.556	1.114	2.117	1....	H2-1
24	M75A	L2.5x2.5x4	.030	1.863	3	.013	1.863	y	9	7.815	38.556	1.114	2.274	1....	H2-1
25	M97A	L2.5x2.5x6	.022	5.25	2	.002	5.25	z	2	5.696	56.052	1.512	3.015	1....	H2-1
26	M95A	L2.5x2.5x6	.021	5.25	29	.002	5.25	z	2	5.696	56.052	1.512	3.081	1....	H2-1
27	M116	L2.5x2.5x6	.021	5.25	2	.002	5.25	z	2	5.696	56.052	1.512	3.005	1....	H2-1
28	M94A	L2.5x2.5x6	.020	5.25	11	.002	5.25	z	8	5.696	56.052	1.512	3.051	1....	H2-1
29	M115	L2.5x2.5x6	.020	5.25	2	.002	5.25	z	2	5.696	56.052	1.512	3.024	1....	H2-1
30	M108A	L2.5x2.5x6	.012	1.45	9	.001	1.057	z	10	52.321	56.052	1.512	3.537	1....	H2-1
31	M109A	L2.5x2.5x6	.004	0	29	.001	1.45	z	29	52.321	56.052	1.512	3.537	1....	H2-1
32	M117	L2.5x2.5x6	.002	0	29	.000	1.45	y	29	52.321	56.052	1.512	3.537	1....	H2-1

M□□mem□er□tre□e□d□n□t□e□eed□□□□□ □□□t□e□□□□ □□□□□ □□e□□p□□it□□T□ere□□re□t□e□ pr□p□□ed□mem□er□□□re□□dequ□te□t□□□upp□rt□t□e□pr□p□□ed□in□t□□□ti□n□

Load Combinations

	Description	Sol...	PDel...	S...	B...	Fa...	B...	Fa...	B...	Fa...	B...	Fa...	B...	Fa...	B...	Fa...	B...	Fa...	B...	Fa...	B...	Fa...	B...	Fa...	B...	Fa...
1	*LRFD																									
2	1.4D		Y		1	1.4																				
3	1.2D+(WLX+WLZ) - 0 Deg		Y		1	1.2	2	1																		
4	1.2D+(WLX+WLZ) - 30 Deg		Y		1	1.2	2	.866	3	.5																
5	1.2D+(WLX+WLZ) - 60 Deg		Y		1	1.2	2	.5	3	.866																
6	1.2D+(WLX+WLZ) - 90 Deg		Y		1	1.2	2		3	1																
7	1.2D+(WLX+WLZ) - 120 Deg		Y		1	1.2	2	-.5	3	.866																
8	1.2D+(WLX+WLZ) - 150 Deg		Y		1	1.2	2	-.8...	3	.5																
9	1.2D+(WLX+WLZ) - 180 Deg		Y		1	1.2	2	-1	3																	
10	1.2D+(WLX+WLZ) - 210 Deg		Y		1	1.2	2	-.8...	3	-.5																
11	1.2D+(WLX+WLZ) - 240 Deg		Y		1	1.2	2	-.5	3	-.8...																
12	1.2D+(WLX+WLZ) - 270 Deg		Y		1	1.2	2		3	-1																
13	1.2D+(WLX+WLZ) - 300 Deg		Y		1	1.2	2	.5	3	-.8...																
14	1.2D+(WLX+WLZ) - 330 Deg		Y		1	1.2	2	.866	3	-.5																
15	**Wind Load with Ice**																									
16	1.2D+1.0Di+1.0(WLXi+WLZi) - ...		Y		1	1.2	4	1	5	1	6															
17	1.2D+1.0Di+1.0(WLXi+WLZi) - ...		Y		1	1.2	4	1	5	.866	6	.5														
18	1.2D+1.0Di+1.0(WLXi+WLZi) - ...		Y		1	1.2	4	1	5	.5	6	.866														
19	1.2D+1.0Di+1.0(WLXi+WLZi) - ...		Y		1	1.2	4	1	5		6	1														
20	1.2D+1.0Di+1.0(WLXi+WLZi) - ...		Y		1	1.2	4	1	5	-.5	6	.866														
21	1.2D+1.0Di+1.0(WLXi+WLZi) - ...		Y		1	1.2	4	1	5	-.8...	6	.5														
22	1.2D+1.0Di+1.0(WLXi+WLZi) - ...		Y		1	1.2	4	1	5	-1	6															
23	1.2D+1.0Di+1.0(WLXi+WLZi) - ...		Y		1	1.2	4	1	5	-.8...	6	-.5														
24	1.2D+1.0Di+1.0(WLXi+WLZi) - ...		Y		1	1.2	4	1	5	-.5	6	-.8...														
25	1.2D+1.0Di+1.0(WLXi+WLZi) - ...		Y		1	1.2	4	1	5		6	-1														
26	1.2D+1.0Di+1.0(WLXi+WLZi) - ...		Y		1	1.2	4	1	5	.5	6	-.8...														
27	1.2D+1.0Di+1.0(WLXi+WLZi) - ...		Y		1	1.2	4	1	5	.866	6	-.5														
28	**Seismic Load**																									
29	1.2D+ELv+ELh		Y		1	1.2	7	1	8	1																
30	**Sliding + Overturn Check**																									
31	0.6WLZ		Y		3	.6																				
32	*ASD		Y		1	1.2	7	1	8	1																
33	D	Yes	Y		1	1																				
34	D+(0.6WLX) - 0 Deg	Yes	Y		1	1	2	.6																		
35	D+(0.6WLX+0.6WLZ) - 30 Deg	Yes	Y		1	1	2	.52	3	.3																
36	D+(0.6WLX+0.6WLZ) - 60 Deg	Yes	Y		1	1	2	.3	3	.52																
37	D+(0.6WLZ) - 90 Deg	Yes	Y		1	1	2		3	.6																
38	D+(0.6WLX+0.6WLZ) - 120 Deg	Yes	Y		1	1	2	-.3	3	.52																
39	D+(0.6WLX+0.6WLZ) - 150 Deg	Yes	Y		1	1	2	-.52	3	-.3																
40	D+(0.6WLX+0.6WLZ) - 180 Deg	Yes	Y		1	1	2	-.6	3																	
41	D+(0.6WLX+0.6WLZ) - 210 Deg	Yes	Y		1	1	2	-.52	3	-.3																
42	D+(0.6WLX+0.6WLZ) - 240 Deg	Yes	Y		1	1	2	-.3	3	-.52																
43	D+(0.6WLX+0.6WLZ) - 270 Deg	Yes	Y		1	1	2		3	-.6																
44	D+(0.6WLX+0.6WLZ) - 300 Deg	Yes	Y		1	1	2	.3	3	-.52																
45	D+(0.6WLX+0.6WLZ) - 330 Deg	Yes	Y		1	1	2	.52	3	-.3																
46	**Wind Load with Ice**																									
47	D+0.7Di+0.6(WLXi+WLZi) - 0 D...	Yes	Y		1	1	4	.7	5	.6	6															
48	D+0.7Di+0.6(WLXi+WLZi) - 30 ...	Yes	Y		1	1	4	.7	5	.52	6	.3														
49	D+0.7Di+0.6(WLXi+WLZi) - 60 ...	Yes	Y		1	1	4	.7	5	.3	6	.52														
50	D+0.7Di+0.6(WLXi+WLZi) - 90 ...	Yes	Y		1	1	4	.7	5		6	.6														
51	D+0.7Di+0.6(WLXi+WLZi) - 12...	Yes	Y		1	1	4	.7	5	-.3	6	.52														

Load Combinations (Continued)

	Description	Sol...	PDel...	S...	B...	Fa...	B...	Fa...	B...	Fa...	B...	Fa...	B...	Fa...	B...	Fa...	B...	Fa...	B...	Fa...	B...	Fa...	B...	Fa...
52	D+0.7Di+0.6(WLXi+WLZi) - 15...	Yes	Y		1	1	4	.7	5	-.52	6	.3												
53	D+0.7Di+0.6(WLXi+WLZi) - 18...	Yes	Y		1	1	4	.7	5	-.6	6													
54	D+0.7Di+0.6(WLXi+WLZi) - 21...	Yes	Y		1	1	4	.7	5	-.52	6	-.3												
55	D+0.7Di+0.6(WLXi+WLZi) - 24...	Yes	Y		1	1	4	.7	5	-.3	6	-.52												
56	D+0.7Di+0.6(WLXi+WLZi) - 27...	Yes	Y		1	1	4	.7	5		6	-.6												
57	D+0.7Di+0.6(WLXi+WLZi) - 30...	Yes	Y		1	1	4	.7	5	.3	6	-.52												
58	D+0.7Di+0.6(WLXi+WLZi) - 33...	Yes	Y		1	1	4	.7	5	.52	6	-.3												
59	**Seismic Load**																							
60	D+0.7ELv+0.7ELh	Yes	Y		1	1	7	.7	8	.7														

Envelope Joint Displacements

	Joint		X [in]	LC	Y [in]	LC	Z [in]	LC	X Rotation...	LC	Y Rotation...	LC	Z Rotation...	LC
1	N116A	max	1.294	34	.002	38	2.678	43	3.804e-02	43	1.571e-03	37	1.717e-02	40
2		min	-1.299	40	-.003	44	-2.61	37	-3.692e-02	37	-1.519e-03	43	-1.711e-02	34
3	N140A	max	1.089	34	.112	37	2.221	43	3.803e-02	43	1.571e-03	37	1.717e-02	40
4		min	-1.093	40	-.117	43	-2.167	37	-3.692e-02	37	-1.519e-03	43	-1.711e-02	34
5	N115A	max	.851	34	0	40	1.531	43	1.649e-02	43	8.185e-03	36	1.019e-02	40
6		min	-.86	40	-.002	45	-1.433	37	-1.523e-02	37	-8.42e-03	42	-1.009e-02	34
7	N135A	max	.586	34	.045	37	1.086	43	1.643e-02	43	8.185e-03	36	1.012e-02	40
8		min	-.593	40	-.05	43	-1.022	37	-1.516e-02	37	-8.42e-03	42	-1.002e-02	34
9	N117A	max	.8	34	.002	36	.885	43	1.121e-02	43	3.466e-04	41	8.939e-03	40
10		min	-.795	40	-.003	42	-.818	37	-1.031e-02	37	-4.184e-04	35	-8.987e-03	34
11	N114A	max	.29	34	0	35	.463	43	5.309e-03	43	2.103e-03	43	2.532e-03	40
12		min	-.284	40	0	39	-.464	37	-5.336e-03	37	-2.114e-03	37	-2.602e-03	34
13	N134A	max	.45	34	.032	37	.45	43	1.101e-02	43	3.466e-04	41	8.737e-03	40
14		min	-.447	40	-.036	43	-.418	37	-1.011e-02	37	-4.184e-04	35	-8.786e-03	34
15	N202	max	.156	35	.029	37	.312	43	1.032e-02	43	8.001e-03	37	4.374e-03	41
16		min	-.158	39	-.032	43	-.3	37	-9.684e-03	37	-8.209e-03	43	-4.274e-03	35
17	N119A	max	.111	34	.025	43	.243	43	8.458e-03	43	8.e-03	37	2.836e-03	41
18		min	-.111	40	-.024	37	-.235	37	-7.989e-03	37	-8.21e-03	43	-2.737e-03	35
19	N136A	max	.207	34	.026	37	.143	43	8.866e-03	43	5.381e-04	41	6.73e-03	40
20		min	-.206	40	-.029	43	-.135	37	-8.244e-03	37	-6.098e-04	35	-6.789e-03	34
21	N156A	max	.058	34	-.037	40	.132	56	1.043e-04	50	2.363e-03	50	-9.703e-04	34
22		min	-.064	40	-.063	58	-.13	50	-1.179e-03	56	-2.342e-03	56	-1.915e-03	40
23	N155A	max	.058	34	-.043	34	.13	56	3.344e-05	50	2.42e-03	56	1.782e-03	34
24		min	-.064	40	-.069	54	-.128	50	-1.238e-03	56	-2.4e-03	50	8.382e-04	40
25	N158A	max	.041	34	-.034	40	.126	56	-2.939e-04	40	2.173e-03	50	-8.948e-04	34
26		min	-.045	40	-.059	47	-.12	50	-5.123e-04	57	-2.166e-03	56	-1.865e-03	40
27	N157A	max	.042	34	-.039	34	.124	56	-3.546e-04	35	2.233e-03	56	1.743e-03	34
28		min	-.045	40	-.064	53	-.119	50	-5.774e-04	55	-2.217e-03	50	7.746e-04	40
29	N118A	max	.11	34	.009	43	.053	42	2.977e-03	43	2.103e-03	43	5.103e-04	38
30		min	-.11	40	-.009	37	-.051	36	-3.003e-03	37	-2.114e-03	37	-5.772e-04	44
31	N138A	max	.076	34	.022	37	.047	38	7.078e-03	43	1.484e-03	38	4.179e-03	40
32		min	-.075	40	-.024	43	-.048	44	-6.726e-03	37	-1.456e-03	44	-4.143e-03	34
33	N120A	max	.11	34	.027	43	.033	41	1.013e-02	43	1.651e-03	38	4.089e-03	41
34		min	-.11	40	-.028	37	-.032	35	-9.852e-03	37	-1.615e-03	44	-4.025e-03	35
35	N122A	max	.11	34	.02	45	.03	40	6.374e-03	43	1.081e-03	38	1.864e-03	42
36		min	-.11	40	-.021	40	-.029	34	-6.508e-03	37	-1.051e-03	44	-1.769e-03	36
37	N123A	max	.11	34	.011	40	.026	45	4.547e-03	43	2.986e-03	37	1.163e-03	37
38		min	-.11	40	-.013	45	-.022	38	-4.583e-03	37	-3.148e-03	43	-1.267e-03	43

Envelope Joint Displacements (Continued)

	Joint		X [in]	LC	Y [in]	LC	Z [in]	LC	X Rotation...	LC	Y Rotation...	LC	Z Rotation...	LC
39	N121A	max	.11	34	.013	43	.016	34	5.161e-03	43	7.956e-04	40	3.201e-03	40
40		min	-.11	40	-.013	37	-.016	40	-4.893e-03	37	-8.593e-04	35	-3.433e-03	45
41	N142A	max	.074	34	0	42	.012	34	7.484e-04	50	3.27e-03	56	1.824e-03	40
42		min	-.091	40	0	50	-.016	40	-1.068e-03	56	-3.245e-03	50	-1.158e-03	34
43	N144A	max	.082	34	0	44	.014	40	8.136e-04	50	3.328e-03	50	1.377e-03	40
44		min	-.083	40	0	50	-.014	34	-1.063e-03	56	-3.321e-03	56	-1.605e-03	34
45	N153	max	.077	34	0	44	.013	40	8.136e-04	50	3.328e-03	50	1.377e-03	40
46		min	-.079	40	0	50	-.013	34	-1.063e-03	56	-3.321e-03	56	-1.605e-03	34

M□□□□er□i□e□De□□e□ti□n□□□□□□"□□□□□mp□□□□□□mp□□□□□□□□□□□"□□□□□□"□□ □

SECTOR 2 & 3

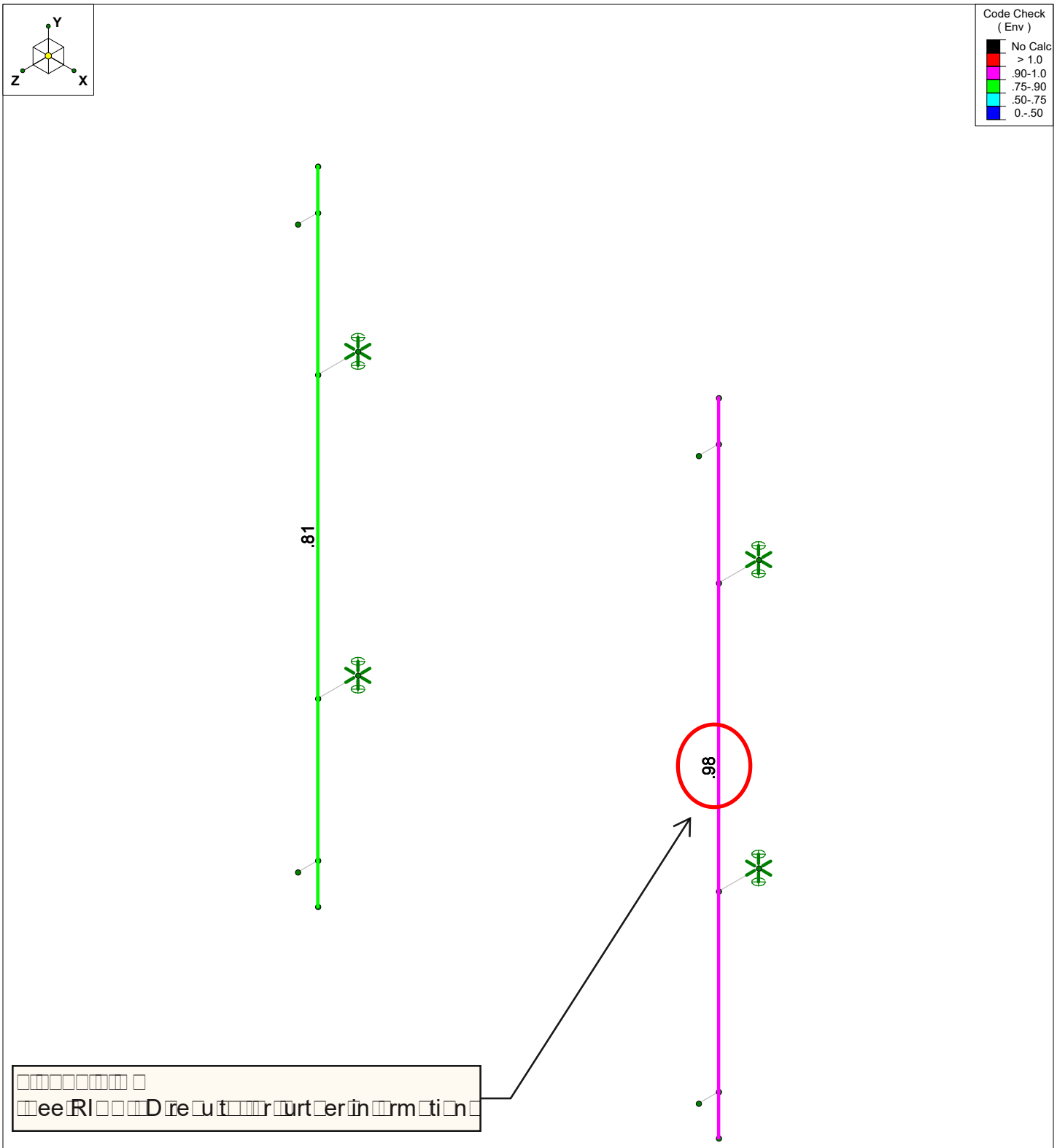

Member Code Checks Displayed (Enveloped)
Envelope Only Solution

Tectonic Engineering	All Sectors	
RTK		June 3, 2021 at 3:12 PM
10666.023		Exiting Mount.r3d

Hot Rolled Steel Properties

	Label	E [ksi]	G [ksi]	Nu	Therm (\1E...	Density[k/ft...	Yield[ksi]	Ry	Fu[ksi]	Rt
1	A992	29000	11154	.3	.65	.49	50	1.1	65	1.1
2	A36 Gr.36	29000	11154	.3	.65	.49	36	1.5	58	1.2
3	A572 Gr.50	29000	11154	.3	.65	.49	50	1.1	65	1.1
4	A500 Gr.B RND	29000	11154	.3	.65	.527	42	1.4	58	1.3
5	A500 Gr.B RECT	29000	11154	.3	.65	.527	46	1.4	58	1.3
6	A500 Gr.C RND	29000	11154	.3	.65	.527	46	1.4	62	1.3
7	A500 Gr.C RECT	29000	11154	.3	.65	.527	50	1.4	62	1.3
8	A53 Gr.B	29000	11154	.3	.65	.49	35	1.6	60	1.2
9	A1085	29000	11154	.3	.65	.49	50	1.4	65	1.3
10	A913 Gr.65	29000	11154	.3	.65	.49	65	1.1	80	1.1

Hot Rolled Steel Section Sets

	Label	Shape	Type	Design List	Material	Design R...	A [in2]	Iyy [in4]	Izz [in4]	J [in4]
1	(E) 2" STD Pipe	HSS2.375X0....	Column	Pipe	A53 Gr.B	Typical	1	.627	.627	1.25
2	(P) HSS 2.375x0.154	HSS2.375X0....	Column	Pipe	A53 Gr.B	Typical	1	.627	.627	1.25

Basic Load Cases

	BLC Description	Category	X Grav...	Y Grav...	Z Gravi...	Joint	Point	Distributed	Area(Member)	Surface(Plate/Wall)
1	DL	DL		-1.05		4				
2	WLX	WLX				4		2		
3	WLZ	WLZ				4		2		
4	DLi	SL				4		2		
5	WLXi	OL1				4		2		
6	WLZi	OL2				4		2		
7	ELv	ELY		-.047		4				
8	ELh	EL	-.08		-.08	8				

Load Combinations

	Description	Sol...	P	Del...	S...	B...	Fa...	B...	Fa...	B...	Fa...	B...	Fa...	B...	Fa...	B...	Fa...	B...	Fa...	B...	Fa...	B...	Fa...	B...	Fa...
1	*LRFD																								
2	1.4D	Yes		Y		1	1.4																		
3	1.2D+(WLX+WLZ) - 0 Deg	Yes		Y		1	1.2	2	1																
4	1.2D+(WLX+WLZ) - 30 Deg	Yes		Y		1	1.2	2	.866	3	.5														
5	1.2D+(WLX+WLZ) - 60 Deg	Yes		Y		1	1.2	2	.5	3	.866														
6	1.2D+(WLX+WLZ) - 90 Deg	Yes		Y		1	1.2	2		3	1														
7	1.2D+(WLX+WLZ) - 120 Deg	Yes		Y		1	1.2	2	-.5	3	.866														
8	1.2D+(WLX+WLZ) - 150 Deg	Yes		Y		1	1.2	2	-.8...	3	.5														
9	1.2D+(WLX+WLZ) - 180 Deg	Yes		Y		1	1.2	2	-1	3															
10	1.2D+(WLX+WLZ) - 210 Deg	Yes		Y		1	1.2	2	-.8...	3	-.5														
11	1.2D+(WLX+WLZ) - 240 Deg	Yes		Y		1	1.2	2	-.5	3	-.8...														
12	1.2D+(WLX+WLZ) - 270 Deg	Yes		Y		1	1.2	2		3	-1														
13	1.2D+(WLX+WLZ) - 300 Deg	Yes		Y		1	1.2	2	.5	3	-.8...														
14	1.2D+(WLX+WLZ) - 330 Deg	Yes		Y		1	1.2	2	.866	3	-.5														
15	**Wind Load with Ice**																								
16	1.2D+1.0Di+1.0(WLXi+WLZi) - ...	Yes		Y		1	1.2	4	1	5	1	6													
17	1.2D+1.0Di+1.0(WLXi+WLZi) - ...	Yes		Y		1	1.2	4	1	5	.866	6	.5												

Load Combinations (Continued)

	Description	Sol...	P	Del...	S...	B...	Fa...	B...	Fa...	B...	Fa...	B...	Fa...	B...	Fa...	B...	Fa...	B...	Fa...	B...	Fa...	B...	Fa...	B...	Fa...
18	1.2D+1.0Di+1.0(WLXi+WLZi) - ...	Yes		Y		1	1.2	4	1	5	.5	6	.866												
19	1.2D+1.0Di+1.0(WLXi+WLZi) - ...	Yes		Y		1	1.2	4	1	5		6	1												
20	1.2D+1.0Di+1.0(WLXi+WLZi) - ...	Yes		Y		1	1.2	4	1	5	-.5	6	.866												
21	1.2D+1.0Di+1.0(WLXi+WLZi) - ...	Yes		Y		1	1.2	4	1	5	-.8...	6	.5												
22	1.2D+1.0Di+1.0(WLXi+WLZi) - ...	Yes		Y		1	1.2	4	1	5	-1	6													
23	1.2D+1.0Di+1.0(WLXi+WLZi) - ...	Yes		Y		1	1.2	4	1	5	-.8...	6	-.5												
24	1.2D+1.0Di+1.0(WLXi+WLZi) - ...	Yes		Y		1	1.2	4	1	5	-.5	6	-.8...												
25	1.2D+1.0Di+1.0(WLXi+WLZi) - ...	Yes		Y		1	1.2	4	1	5		6	-1												
26	1.2D+1.0Di+1.0(WLXi+WLZi) - ...	Yes		Y		1	1.2	4	1	5	.5	6	-.8...												
27	1.2D+1.0Di+1.0(WLXi+WLZi) - ...	Yes		Y		1	1.2	4	1	5	.866	6	-.5												
28	**Seismic Load**																								
29	1.2D+ELv+ELh	Yes		Y		1	1.2	7	1	8	1														
30	*ASD			Y		1	1.2	7	1	8	1														
31	D			Y		1	1																		
32	D+(0.6WLX) - 0 Deg			Y		1	1	2	.6																
33	D+(0.6WLX+0.6WLZ) - 30 Deg			Y		1	1	2	.52	3	.3														
34	D+(0.6WLX+0.6WLZ) - 60 Deg			Y		1	1	2	.3	3	.52														
35	D+(0.6WLZ) - 90 Deg			Y		1	1	2		3	.6														
36	D+(0.6WLX+0.6WLZ) - 120 Deg			Y		1	1	2	-.3	3	.52														
37	D+(0.6WLX+0.6WLZ) - 150 Deg			Y		1	1	2	-.52	3	-.3														
38	D+(0.6WLX+0.6WLZ) - 180 Deg			Y		1	1	2	-.6	3															
39	D+(0.6WLX+0.6WLZ) - 210 Deg			Y		1	1	2	-.52	3	-.3														
40	D+(0.6WLX+0.6WLZ) - 240 Deg			Y		1	1	2	-.3	3	-.52														
41	D+(0.6WLX+0.6WLZ) - 270 Deg			Y		1	1	2		3	-.6														
42	D+(0.6WLX+0.6WLZ) - 300 Deg			Y		1	1	2	.3	3	-.52														
43	D+(0.6WLX+0.6WLZ) - 330 Deg			Y		1	1	2	.52	3	-.3														
44	**Wind Load with Ice**																								
45	D+0.7Di+0.6(WLXi+WLZi) - 0 D...			Y		1	1	4	.7	5	.6	6													
46	D+0.7Di+0.6(WLXi+WLZi) - 30 ...			Y		1	1	4	.7	5	.52	6	.3												
47	D+0.7Di+0.6(WLXi+WLZi) - 60 ...			Y		1	1	4	.7	5	.3	6	.52												
48	D+0.7Di+0.6(WLXi+WLZi) - 90 ...			Y		1	1	4	.7	5		6	.6												
49	D+0.7Di+0.6(WLXi+WLZi) - 12...			Y		1	1	4	.7	5	-.3	6	.52												
50	D+0.7Di+0.6(WLXi+WLZi) - 15...			Y		1	1	4	.7	5	-.52	6	.3												
51	D+0.7Di+0.6(WLXi+WLZi) - 18...			Y		1	1	4	.7	5	-.6	6													
52	D+0.7Di+0.6(WLXi+WLZi) - 21...			Y		1	1	4	.7	5	-.52	6	-.3												
53	D+0.7Di+0.6(WLXi+WLZi) - 24...			Y		1	1	4	.7	5	-.3	6	-.52												
54	D+0.7Di+0.6(WLXi+WLZi) - 27...			Y		1	1	4	.7	5		6	-.6												
55	D+0.7Di+0.6(WLXi+WLZi) - 30...			Y		1	1	4	.7	5	.3	6	-.52												
56	D+0.7Di+0.6(WLXi+WLZi) - 33...			Y		1	1	4	.7	5	.52	6	-.3												
57	**Seismic Load**																								
58	D+0.7ELv+0.7ELh			Y		1	1	7	.7	8	.7														

Envelope AISC 15th(360-16): ASD Steel Code Checks

	Member	Shape	Code C...	Loc[ft]	LC	Shear ...	Loc[ft]	Dir	LC	Pnc/om [k]	Pnt/om [k]	Mnyy/om ...	Mnzz/om ...	Cb	Eqn
1	M1	HSS2.375X0...	.815	2.25	6	.096	5.75		7	9.877	20.958	1.245	1.245	1	H1-1b
2	M6	HSS2.375X0...	.984	2.667	6	.096	2.667		7	9.877	20.958	1.245	1.245	1	H1-1b

M□□mem□er□tre□e□d□n□t□e□eed□□□□ □□□t□e□□□□ □□□□□□□e□□p□□it□□□
T□ere□□re□□t□e□pr□p□□ed□mem□er□□□re□□dequ□te□t□□□upp□rt□t□e□pr□p□□ed□in□t□□□ti□n□

Load Combinations

	Description	Sol...	PDel...	S...	B...	Fa...	B...	Fa...	B...	Fa...	B...	Fa...	B...	Fa...	B...	Fa...	B...	Fa...	B...	Fa...	B...	Fa...	B...	Fa...	B...	Fa...
1	*LRFD																									
2	1.4D		Y		1	1.4																				
3	1.2D+(WLX+WLZ) - 0 Deg		Y		1	1.2	2	1																		
4	1.2D+(WLX+WLZ) - 30 Deg		Y		1	1.2	2	.866	3	.5																
5	1.2D+(WLX+WLZ) - 60 Deg		Y		1	1.2	2	.5	3	.866																
6	1.2D+(WLX+WLZ) - 90 Deg		Y		1	1.2	2		3	1																
7	1.2D+(WLX+WLZ) - 120 Deg		Y		1	1.2	2	-.5	3	.866																
8	1.2D+(WLX+WLZ) - 150 Deg		Y		1	1.2	2	-.8...	3	.5																
9	1.2D+(WLX+WLZ) - 180 Deg		Y		1	1.2	2	-1	3																	
10	1.2D+(WLX+WLZ) - 210 Deg		Y		1	1.2	2	-.8...	3	-.5																
11	1.2D+(WLX+WLZ) - 240 Deg		Y		1	1.2	2	-.5	3	-.8...																
12	1.2D+(WLX+WLZ) - 270 Deg		Y		1	1.2	2		3	-1																
13	1.2D+(WLX+WLZ) - 300 Deg		Y		1	1.2	2	.5	3	-.8...																
14	1.2D+(WLX+WLZ) - 330 Deg		Y		1	1.2	2	.866	3	-.5																
15	**Wind Load with Ice**																									
16	1.2D+1.0Di+1.0(WLXi+WLZi) - ...		Y		1	1.2	4	1	5	1	6															
17	1.2D+1.0Di+1.0(WLXi+WLZi) - ...		Y		1	1.2	4	1	5	.866	6	.5														
18	1.2D+1.0Di+1.0(WLXi+WLZi) - ...		Y		1	1.2	4	1	5	.5	6	.866														
19	1.2D+1.0Di+1.0(WLXi+WLZi) - ...		Y		1	1.2	4	1	5		6	1														
20	1.2D+1.0Di+1.0(WLXi+WLZi) - ...		Y		1	1.2	4	1	5	-.5	6	.866														
21	1.2D+1.0Di+1.0(WLXi+WLZi) - ...		Y		1	1.2	4	1	5	-.8...	6	.5														
22	1.2D+1.0Di+1.0(WLXi+WLZi) - ...		Y		1	1.2	4	1	5	-1	6															
23	1.2D+1.0Di+1.0(WLXi+WLZi) - ...		Y		1	1.2	4	1	5	-.8...	6	-.5														
24	1.2D+1.0Di+1.0(WLXi+WLZi) - ...		Y		1	1.2	4	1	5	-.5	6	-.8...														
25	1.2D+1.0Di+1.0(WLXi+WLZi) - ...		Y		1	1.2	4	1	5		6	-1														
26	1.2D+1.0Di+1.0(WLXi+WLZi) - ...		Y		1	1.2	4	1	5	.5	6	-.8...														
27	1.2D+1.0Di+1.0(WLXi+WLZi) - ...		Y		1	1.2	4	1	5	.866	6	-.5														
28	**Seismic Load**																									
29	1.2D+ELv+ELh		Y		1	1.2	7	1	8	1																
30	*ASD		Y		1	1.2	7	1	8	1																
31	D	Yes	Y		1	1																				
32	D+(0.6WLX) - 0 Deg	Yes	Y		1	1	2	.6																		
33	D+(0.6WLX+0.6WLZ) - 30 Deg	Yes	Y		1	1	2	.52	3	.3																
34	D+(0.6WLX+0.6WLZ) - 60 Deg	Yes	Y		1	1	2	.3	3	.52																
35	D+(0.6WLZ) - 90 Deg	Yes	Y		1	1	2		3	.6																
36	D+(0.6WLX+0.6WLZ) - 120 Deg	Yes	Y		1	1	2	-.3	3	.52																
37	D+(0.6WLX+0.6WLZ) - 150 Deg	Yes	Y		1	1	2	-.52	3	-.3																
38	D+(0.6WLX+0.6WLZ) - 180 Deg	Yes	Y		1	1	2	-.6	3																	
39	D+(0.6WLX+0.6WLZ) - 210 Deg	Yes	Y		1	1	2	-.52	3	-.3																
40	D+(0.6WLX+0.6WLZ) - 240 Deg	Yes	Y		1	1	2	-.3	3	-.52																
41	D+(0.6WLX+0.6WLZ) - 270 Deg	Yes	Y		1	1	2		3	-.6																
42	D+(0.6WLX+0.6WLZ) - 300 Deg	Yes	Y		1	1	2	.3	3	-.52																
43	D+(0.6WLX+0.6WLZ) - 330 Deg	Yes	Y		1	1	2	.52	3	-.3																
44	**Wind Load with Ice**																									
45	D+0.7Di+0.6(WLXi+WLZi) - 0 D...	Yes	Y		1	1	4	.7	5	.6	6															
46	D+0.7Di+0.6(WLXi+WLZi) - 30 ...	Yes	Y		1	1	4	.7	5	.52	6	.3														
47	D+0.7Di+0.6(WLXi+WLZi) - 60 ...	Yes	Y		1	1	4	.7	5	.3	6	.52														
48	D+0.7Di+0.6(WLXi+WLZi) - 90 ...	Yes	Y		1	1	4	.7	5		6	.6														
49	D+0.7Di+0.6(WLXi+WLZi) - 12...	Yes	Y		1	1	4	.7	5	-.3	6	.52														
50	D+0.7Di+0.6(WLXi+WLZi) - 15...	Yes	Y		1	1	4	.7	5	-.52	6	.3														
51	D+0.7Di+0.6(WLXi+WLZi) - 18...	Yes	Y		1	1	4	.7	5	-.6	6															

Load Combinations (Continued)

	Description	Sol...	PDel...	S...	B...	Fa...	B...	Fa...	B...	Fa...	B...	Fa...	B...	Fa...	B...	Fa...	B...	Fa...	B...	Fa...	B...	Fa...	B...	Fa...
52	D+0.7Di+0.6(WLXi+WLZi) - 21...	Yes	Y		1	1	4	.7	5	-.52	6	-.3												
53	D+0.7Di+0.6(WLXi+WLZi) - 24...	Yes	Y		1	1	4	.7	5	-.3	6	-.52												
54	D+0.7Di+0.6(WLXi+WLZi) - 27...	Yes	Y		1	1	4	.7	5		6	-.6												
55	D+0.7Di+0.6(WLXi+WLZi) - 30...	Yes	Y		1	1	4	.7	5	.3	6	-.52												
56	D+0.7Di+0.6(WLXi+WLZi) - 33...	Yes	Y		1	1	4	.7	5	.52	6	-.3												
57	**Seismic Load**																							
58	D+0.7ELv+0.7ELh	Yes	Y		1	1	7	.7	8	.7														

Envelope Joint Reactions

	Joint		X [k]	LC	Y [k]	LC	Z [k]	LC	MX [k-ft]	LC	MY [k-ft]	LC	MZ [k-ft]	LC
1	T/CONN	max	.152	38	0	51	.28	35	0	58	.107	38	0	58
2		min	-.152	32	-.005	35	-.352	41	0	31	-.107	32	0	31
3	B/CONN	max	.151	38	.351	48	.35	35	0	58	.106	38	0	58
4		min	-.151	32	.173	31	-.278	41	0	31	-.106	32	0	31
5	N14	max	.122	38	0	51	.215	35	0	58	.092	38	0	58
6		min	-.122	32	-.004	41	-.292	41	0	31	-.092	32	0	31
7	N16	max	.181	38	.351	54	.415	35	0	58	.121	38	0	58
8		min	-.181	32	.173	31	-.338	41	0	31	-.121	32	0	31
9	Totals:	max	.605	38	.701	49	1.26	35						
10		min	-.605	32	.345	41	-1.26	41						

Envelope Joint Displacements

	Joint		X [in]	LC	Y [in]	LC	Z [in]	LC	X Rotation...	LC	Y Rotation...	LC	Z Rotation...	LC
1	N11	max	.207	32	.05	41	.42	41	1.788e-02	35	6.948e-04	32	7.291e-03	32
2		min	-.207	38	-.064	35	-.509	35	-1.478e-02	41	-6.948e-04	38	-7.291e-03	38
3	N18	max	.166	32	.094	41	.332	41	1.788e-02	35	6.948e-04	32	7.29e-03	32
4		min	-.166	38	-.117	35	-.401	35	-1.477e-02	41	-6.948e-04	38	-7.29e-03	38
5	N17	max	.164	32	.05	41	.332	41	1.788e-02	35	6.948e-04	32	7.29e-03	32
6		min	-.164	38	-.064	35	-.401	35	-1.477e-02	41	-6.948e-04	38	-7.29e-03	38
7	N1	max	.147	32	.046	41	.293	41	1.489e-02	35	5.612e-04	32	5.936e-03	32
8		min	-.147	38	-.061	35	-.368	35	-1.186e-02	41	-5.612e-04	38	-5.936e-03	38
9	N2	max	.148	32	.046	41	.325	41	1.329e-02	41	5.612e-04	32	5.97e-03	38
10		min	-.148	38	-.061	35	-.34	35	-1.36e-02	35	-5.612e-04	38	-5.97e-03	32
11	N30	max	.113	32	.082	41	.222	41	1.489e-02	35	5.612e-04	32	5.935e-03	32
12		min	-.113	38	-.105	35	-.279	35	-1.186e-02	41	-5.612e-04	38	-5.935e-03	38
13	N29	max	.111	32	.046	41	.222	41	1.489e-02	35	5.612e-04	32	5.935e-03	32
14		min	-.111	38	-.061	35	-.279	35	-1.186e-02	41	-5.612e-04	38	-5.935e-03	38
15	N12	max	.116	32	.05	41	.255	41	1.15e-02	41	4.81e-04	32	5.182e-03	38
16		min	-.116	38	-.064	35	-.267	35	-1.184e-02	35	-4.81e-04	38	-5.182e-03	32
17	N32	max	.113	32	.006	41	.246	41	1.329e-02	41	5.612e-04	32	5.968e-03	38
18		min	-.113	38	-.02	35	-.258	35	-1.36e-02	35	-5.612e-04	38	-5.968e-03	32
19	N31	max	.112	32	.046	41	.246	41	1.329e-02	41	5.612e-04	32	5.968e-03	38
20		min	-.112	38	-.061	35	-.258	35	-1.36e-02	35	-5.612e-04	38	-5.968e-03	32
21	N20	max	.086	32	.015	41	.186	41	1.149e-02	41	4.81e-04	32	5.181e-03	38
22		min	-.086	38	-.028	35	-.196	35	-1.184e-02	35	-4.81e-04	38	-5.181e-03	32
23	N19	max	.085	32	.05	41	.186	41	1.149e-02	41	4.81e-04	32	5.181e-03	38
24		min	-.085	38	-.064	35	-.196	35	-1.184e-02	35	-4.81e-04	38	-5.181e-03	32
25	N15	max	0	58	.05	41	0	58	1.059e-02	35	0	58	4.211e-03	32
26		min	0	31	-.064	35	0	31	-8.332e-03	41	0	31	-4.211e-03	38

Envelope Joint Displacements (Continued)

	Joint		X [in]	LC	Y [in]	LC	Z [in]	LC	X Rotation...	LC	Y Rotation...	LC	Z Rotation...	LC
27	N5	max	0	58	.046	41	0	58	1.008e-02	35	0	58	3.936e-03	32
28		min	0	31	-.061	35	0	31	-7.72e-03	41	0	31	-3.936e-03	38
29	N13	max	0	58	.05	41	0	58	7.938e-03	41	0	58	3.703e-03	38
30		min	0	31	-.064	35	0	31	-8.776e-03	35	0	31	-3.703e-03	32
31	N3	max	0	58	.046	41	0	58	8.489e-03	41	0	58	3.95e-03	38
32		min	0	31	-.061	35	0	31	-9.369e-03	35	0	31	-3.95e-03	32
33	N16	max	0	58	0	58	0	58	1.059e-02	35	0	58	4.211e-03	32
34		min	0	31	0	31	0	31	-8.332e-03	41	0	31	-4.211e-03	38
35	B/CONN	max	0	58	0	58	0	58	1.008e-02	35	0	58	3.936e-03	32
36		min	0	31	0	31	0	31	-7.72e-03	41	0	31	-3.936e-03	38
37	N14	max	0	58	0	58	0	58	1.062e-02	35	0	58	0	58
38		min	0	31	0	31	0	31	-8.306e-03	41	0	31	0	31
39	T/CONN	max	0	58	0	58	0	58	1.011e-02	35	0	58	0	58
40		min	0	31	0	31	0	31	-7.693e-03	41	0	31	0	31

M□□□□er□i□e□De□□e□ti□n□□□□□□"□□□□□mp□□□□□□mp□□□□□□□□□□□□"□□□□□"□□ □

APPENDIX D

ADDITIONAL CALCULATIONS

Tectonic
PRACTICAL SOLUTIONS. EXCEPTIONAL SERVICE.

Job No.	10666.023		
Sheet No.	1	of	1
Calculated By	RTK	Date :	06/04/21
Checked By	JL	Date :	06/04/21

BALLAST MOUNT CHECK - ALL SECTORS

Wind Force Per Rev H (qz):	28.43	PSF**	**Converted to ASD

			8x8x16 Block		Tray Total	
Tray-1	4	CMU-1	43	lbs	172	lbs
Tray-2	4		43	lbs	172	lbs
Tray-3	4		43	lbs	172	lbs
Front Tray Extension	4	CMU-2	43	lbs	172	lbs
Back Tray Extension-1	4	CMU-3	43	lbs	172	lbs
Back Tray Extension-2	4	CMU-4	43	lbs	172	lbs
				Total	1032	lbs

Antenna Wind Loads:

Quantity	Model Number	Weight (lbs)	Dead Load	
1	AIR32 KRD901146-1_B66A	132	132.2	lbs
1	AIR6449 B41	104	104.0	lbs
1	APXVAALL24_43-U-NA20	143	143.3	lbs
1	RRU 4449 B71+B85	75	75.0	lbs
1	RRU 4415 B25	46	46.0	lbs
		Wt. Total	526	lbs

Add 5% (brackets, cables, etc)

Mount Wind Loads:

Frame Dimensions

Length	13.45	ft (+6 ft for frame extensions)
Width	10.50	ft

Member Summary:

Quantity	Member ID	Size (in)	Length (ft)	Unit Weight (lbs)	Net Weight	
4	HSS2.875x0.203 (Pipe Mast)	2.875	14.50	84.10	336	lbs
3	HSS2.375x0.154 (Horizontal Support Pipe)	2.375	10.50	44.81	134	lbs
2	HSS2.375x0.154 (Kickback Pipe)	2.375	10.50	40.75	82	lbs
2	HSS2.375x0.154 (Diagonal Brace Pipe)	2.375	5.25	20.18	40	lbs
2	HSS1.660x0.140 (RRH Kickback Pipe)	1.3	10.50	25.12	50	lbs
2	HSS2.375x0.154 (RRH Post Pipe)	2.375	5.25	20.18	40	lbs
6	Unistrut (RRH Frame)	1.6	10.00	20.38	122	lbs
3	Ballast Tray Weldment	-	-	66.53	200	lbs
2	L2-1/2"x2-1/2"x3/8" (Proposed Extension)	2.5	13.45	83.31	167	lbs
6	L2-1/2"x2-1/2"x3/8" (Proposed Extension)	2.5	10.50	65.05	390	lbs
		Frame Weight Total	1720	lbs (Excludes Equipment)		

Sliding Check:

Horizontal Wind Force Per RISA-3D Output =	1847	lbs *(LC31)*			
Resisting Force:	2294	lbs	Friction Coeff:	0.7	Rubber mat to roof
FS:	**1.24**	**≥ 1.2 OK**			

Overturn Check:

Uplift Force Per RISA-3D Output =	1064.0	lbs *(LC31)*
Overturn moment:	14308.6	lb-ft
Direction:	WLZ	(Worst Case)
Base	6.72	
CMU-1	6.72	
CMU-2	0.75	
CMU-3	10.70	
CMU-4	12.70	
Resisting Moment	21182.2	lb-ft
FS:	**1.48**	**≥ 1.2 OK**

Final Roof Pressure:

L	14.45	ft
W	11.50	ft
Area	166.15	ft^2
Total Weight	3277	lbs
	19.7	**psf**

THE SAFETY FACTORS AGAINST SLIDING AND OVERTURNING ARE GREATER THAN OR EQUAL TO 1.20. ADDITIONALLY, THE FINAL ROOF PRESSURE IS LESS THAN THE ALLOWABLE 20 PSF. THEREFORE, THE BALLAST MOUNT AND SUPPORTING STRUCTURE ARE ADEQUATE TO SUPPORT THE PROPOSED INSTALLATION.

Job No.	10666.023		
Sheet No.	1	of	3
Calculated By	RTK	Date :	06/03/21
Checked By	JL	Date :	06/03/21

Tectonic
PRACTICAL SOLUTIONS. EXCEPTIONAL SERVICE.

Existing Connection Anchor Check - Sector 2

Proposed anchors are 1/2 diameter HY-70 with 6 inch embedment

Tallow = 895 lbs

Vallow = 1075 lbs

Max Loads Per Risa Output: Node N16 LC Env.

Tmax = 298.3 lbs

Vmax = 200.0 lbs

Interaction:

# of Anchors = 1

Reduction due to existing conditions? No

$$\frac{298.3}{895.0} + \frac{200.0}{1075.0} = 0.52 \quad \leq 1.0, \text{ OK}$$

Comments: Existing connection are (2) 1/2" dia. Hilti HY-70 w/6" embedment spaced 16" OC.

Existing Structure Check

The existing antenna mounts are flush mounted to the façade of the existing building structure. Therefore, there will be no increase in normal load on the structure and all other additional loads will be minimal. Hence, the existing structure will have adequate capacity to support the proposed installation.

Job No.	10666.023		
Sheet No.	2	of	3
Calculated By	RTK	Date :	06/03/21
Checked By	JL	Date :	06/03/21

Tectonic
PRACTICAL SOLUTIONS. EXCEPTIONAL SERVICE.

Existing Connection Anchor Check - Sector 3

Proposed anchors are 1/2 diameter HY-70 with 6 inch embedment

Tallow = 895 lbs

Vallow = 1075 lbs

Max Loads Per Risa Output: Node B/CONN LC Env.

Tmax = 254.5 lbs

Vmax = 200.0 lbs

Interaction:

# of Anchors = 1

Reduction due to existing conditions? No

$$\frac{254.5}{895.0} + \frac{200.0}{1075.0} = 0.47 \quad \leq 1.0, \text{ OK}$$

Comments: Existing connection are (2) 1/2" dia. Hilti HY-70 w/6" embedment spaced 16" OC.

Existing Structure Check

The existing antenna mounts are flush mounted to the façade of the existing building structure. Therefore, there will be no increase in normal load on the structure and all other additional loads will be minimal. Hence, the existing structure will have adequate capacity to support the proposed installation.

Job No.	10666.023		
Sheet No.	3	of	3
Calculated By	RTK	Date :	06/03/21
Checked By	JL	Date :	06/03/21

Tectonic
PRACTICAL SOLUTIONS. EXCEPTIONAL SERVICE.

Proposed Connection Anchor Check - Sector 2 & 3

Proposed anchors are 1/2 diameter HY270 with 6 inch embedment

Tallow = 895 lbs

Vallow = 1075 lbs

Max Loads Per Risa Output: Node B/CONN LC Env.

Tmax = 302.2 lbs

Vmax = 200.0 lbs

Interaction:

# of Anchors = 1

Reduction due to existing conditions? Yes

$$\frac{302.2}{596.7} + \frac{200.0}{716.7} = 0.79 \quad \leq 1.0, \text{ OK}$$

Comments: Existing connection are (2) 1/2" dia. Hilti HY-270 w/6" embedment spaced 10" OC.

Existing Structure Check

The proposed antenna mounts are flush mounted to the façade of the existing building structure. Therefore, there will be no increase in normal load on the structure and all other additional loads will be minimal. Hence, the existing structure will have adequate capacity to support the proposed installation.

APPENDIX E

REFERENCES & STRUCTURAL DETAILS

ASCE 7 Hazards Report

Address:
29 E Main St
Amsterdam, New York
12010

Standard: ASCE/SEI 7-16
Risk Category: II
Soil Class: D - Default (see Section 11.4.3)

Elevation: 278.75 ft (NAVD 88)
Latitude: 42.936703
Longitude: -74.192699

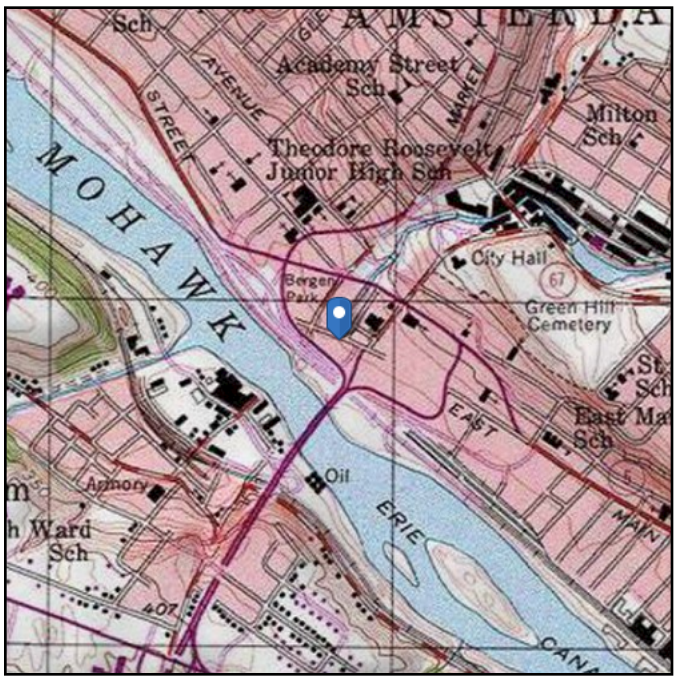

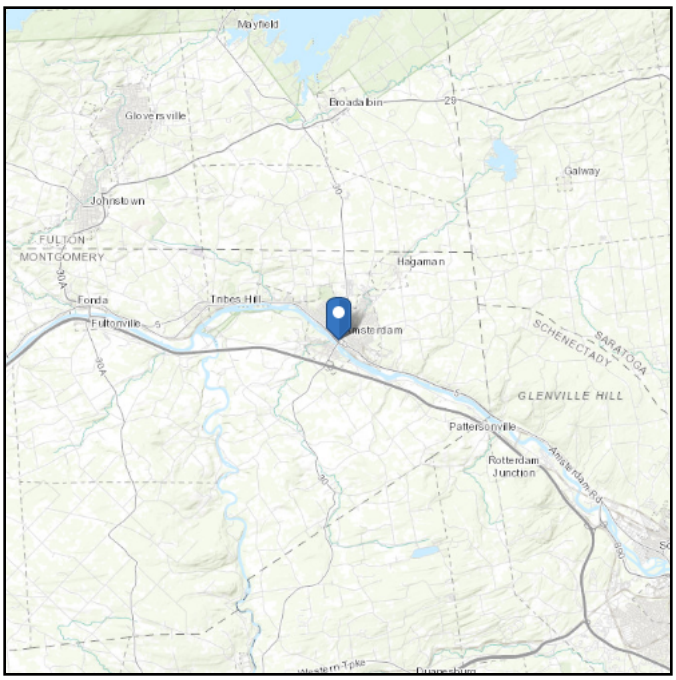

Wind

Results:

Wind Speed:	110 Vmph
10-year MRI	75 Vmph
25-year MRI	81 Vmph
50-year MRI	87 Vmph
100-year MRI	93 Vmph

Data Source:	ASCE/SEI 7-16, Fig. 26.5-1B and Figs. CC.2-1–CC.2-4, and Section 26.5.2
Date Accessed:	Thu May 27 2021

Value provided is 3-second gust wind speeds at 33 ft above ground for Exposure C Category, based on linear interpolation between contours. Wind speeds are interpolated in accordance with the 7-16 Standard. Wind speeds correspond to approximately a 7% probability of exceedance in 50 years (annual exceedance probability = 0.00143, MRI = 700 years).

Site is not in a hurricane-prone region as defined in ASCE/SEI 7-16 Section 26.2.

Seismic

Site Soil Class: D - Default (see Section 11.4.3)

Results:

S_S :	0.218	S_{D1} :	0.101
S_1 :	0.063	T_L :	6
F_a :	1.6	PGA :	0.12
F_v :	2.4	PGA_M :	0.188
S_{MS} :	0.348	F_{PGA} :	1.559
S_{M1} :	0.151	I_e :	1
S_{DS} :	0.232	C_v :	0.735

Seismic Design Category B

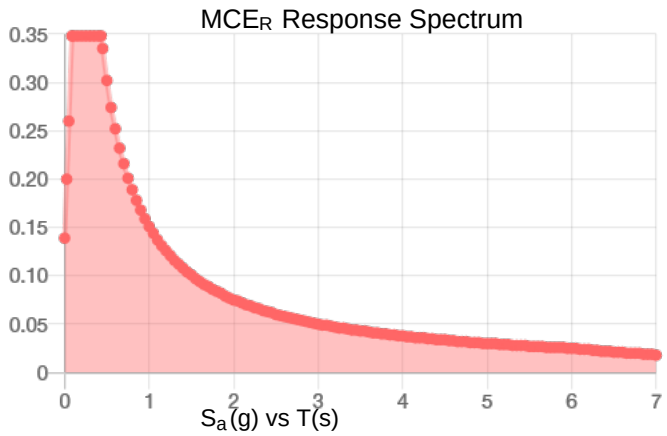

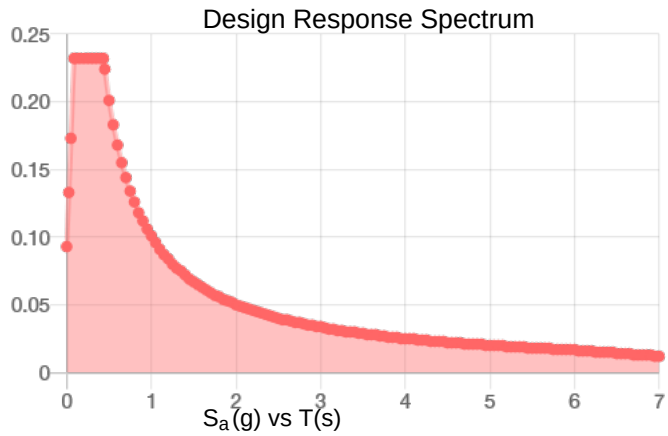

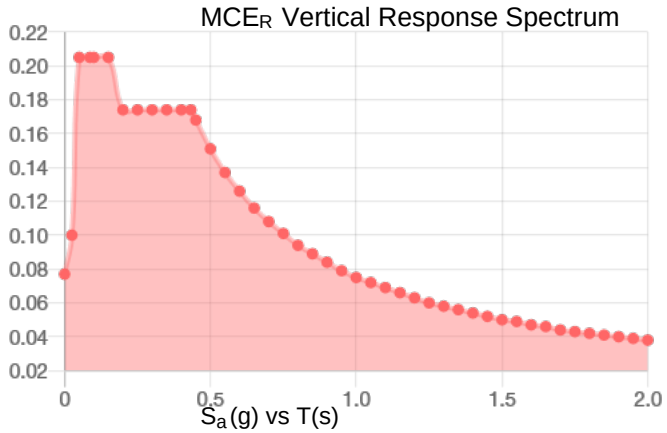

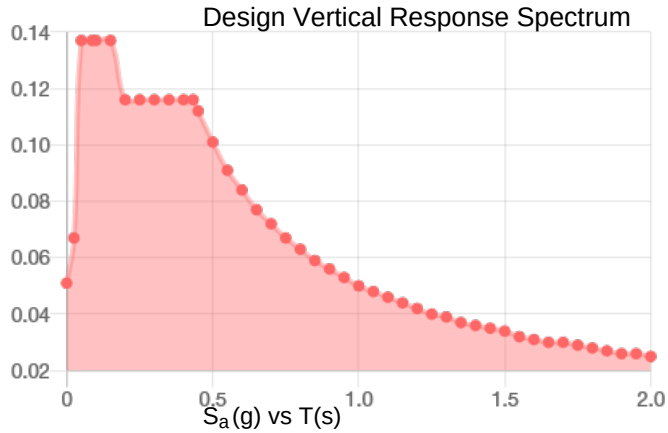

Data Accessed: Thu May 27 2021

Date Source: USGS Seismic Design Maps based on ASCE/SEI 7-16 and ASCE/SEI 7-16 Table 1.5-2. Additional data for site-specific ground motion procedures in accordance with ASCE/SEI 7-16 Ch. 21 are available from USGS.

Ice

Results:

Ice Thickness:	1.00 in.
Concurrent Temperature:	5 F
Gust Speed:	40 mph

Data Source: Standard ASCE/SEI 7-16, Figs. 10-2 through 10-8

Date Accessed: Thu May 27 2021

Ice thicknesses on structures in exposed locations at elevations higher than the surrounding terrain and in valleys and gorges may exceed the mapped values.

Values provided are equivalent radial ice thicknesses due to freezing rain with concurrent 3-second gust speeds, for a 500-year mean recurrence interval, and temperatures concurrent with ice thicknesses due to freezing rain. Thicknesses for ice accretions caused by other sources shall be obtained from local meteorological studies. Ice thicknesses in exposed locations at elevations higher than the surrounding terrain and in valleys and gorges may exceed the mapped values.

The ASCE 7 Hazard Tool is provided for your convenience, for informational purposes only, and is provided “as is” and without warranties of any kind. The location data included herein has been obtained from information developed, produced, and maintained by third party providers; or has been extrapolated from maps incorporated in the ASCE 7 standard. While ASCE has made every effort to use data obtained from reliable sources or methodologies, ASCE does not make any representations or warranties as to the accuracy, completeness, reliability, currency, or quality of any data provided herein. Any third-party links provided by this Tool should not be construed as an endorsement, affiliation, relationship, or sponsorship of such third-party content by or from ASCE.

ASCE does not intend, nor should anyone interpret, the results provided by this Tool to replace the sound judgment of a competent professional, having knowledge and experience in the appropriate field(s) of practice, nor to substitute for the standard of care required of such professionals in interpreting and applying the contents of this Tool or the ASCE 7 standard.

In using this Tool, you expressly assume all risks associated with your use. Under no circumstances shall ASCE or its officers, directors, employees, members, affiliates, or agents be liable to you or any other person for any direct, indirect, special, incidental, or consequential damages arising from or related to your use of, or reliance on, the Tool or any information obtained therein. To the fullest extent permitted by law, you agree to release and hold harmless ASCE from any and all liability of any nature arising out of or resulting from any use of data provided by the ASCE 7 Hazard Tool.

Tectonic

tectonicengineering.com
(800) 829-6531

JOB 10666.023
SHEET NO. 1 OF 2
CALCULATED BY RTK DATE 06/04/21
CHECKED BY DATE
SCALE

Detail S-1: Connection Too Ballast

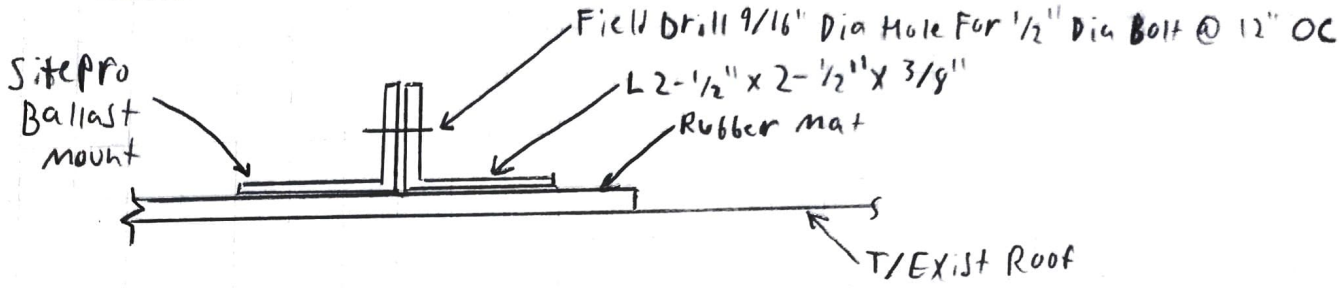

Detail S-2: Frame Connection

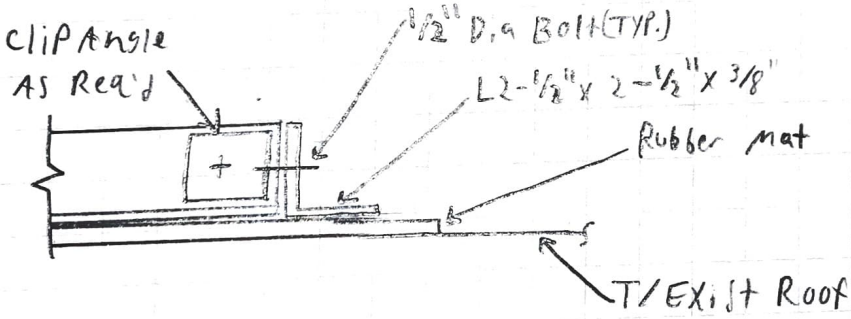

Tectonic

tectonicengineering.com
(800) 829-6531

JOB 10666.023

SHEET NO. 2 OF 2

CALCULATED BY RTH DATE 06/04/21

CHECKED BY _____ DATE _____

SCALE _____

DETI□□□□□PR□P□□ED□M□□□T□□□□E□TI□□

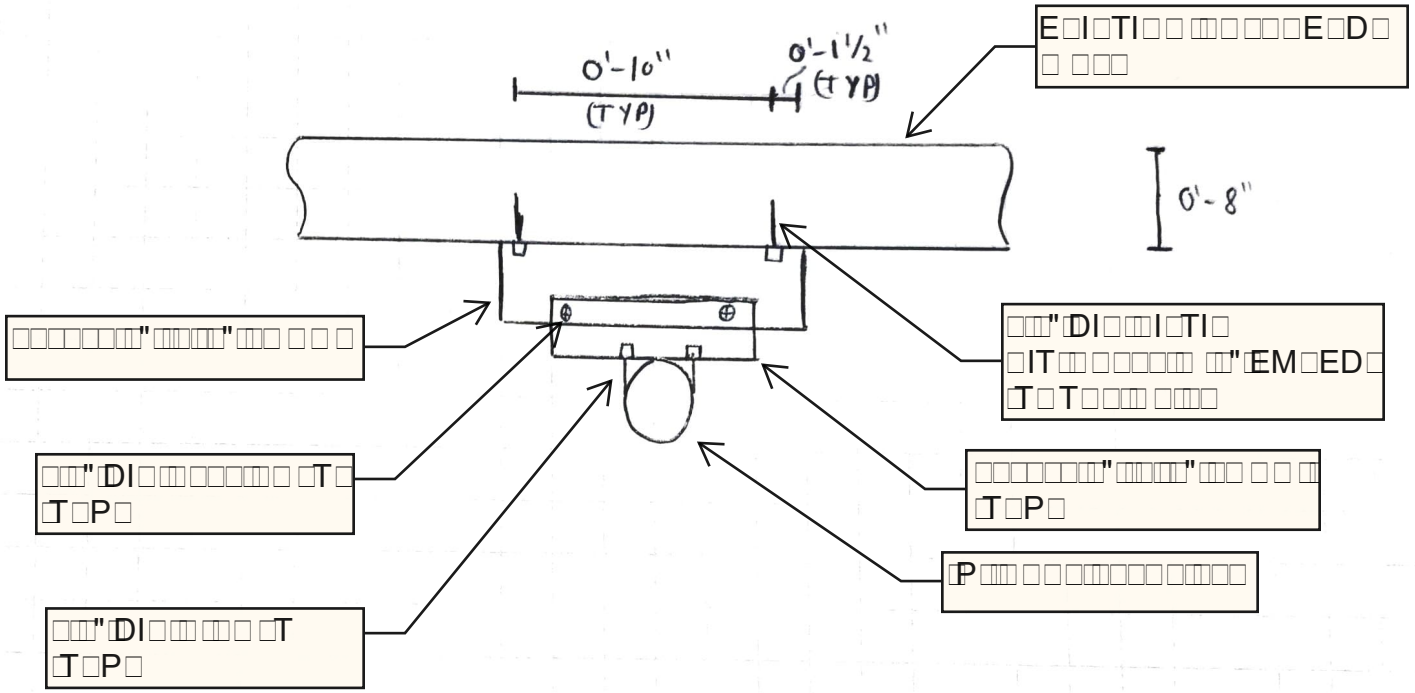

PARTS LIST						
ITEM	QTY	PART NO.	PART DESCRIPTION	LENGTH	UNIT WT.	NET WT.
1	4	P2174	2-3/8" OD X 174" SCH 40 GALVANIZED PIPE	174 in	55.75	222.98
2	2	P1126	1 1/4" X 126" SCH 40 PIPE (STIFF ARM)	126 in	25.12	50.23
3	3	P2126	2-3/8" OD X 126" SCH 40 GALVANIZED PIPE	126 in	40.75	122.26
4	4	P263	2-3/8" X 63"SCH 40 GALVANIZED PIPE	63 in	20.18	80.74
5	3	X-232696	BALLAST TRAY WELDMENT - SITE PRO 1		66.53	199.60
6	2	X-RTP10	FRONT AND BACK HORIZONTAL TRAY SUPPORT WELDMENT		44.81	89.61
7	6	UNT10	UNISTRUT	120 in	20.38	122.27
8	8	X-127594	FLAT DISK CLAMP PLATE 4" CENTERS (GALV.)		2.51	20.05
9	16	X-100064	CLAMP (4" V-CLAMP) GALVANIZED		0.91	14.61
10	14	SCX1	CROSSOVER PLATE 2-3/8" X 2-3/8"	6 in	3.71	51.92
11	56	X-UB1212	1/2" X 2-1/2" X 4-1/2" X 2" U-BOLT (HDG.)		0.63	35.01
12	32	G1204	1/2" x 4" HDG HEX BOLT GR5 FULL THREAD	4 in	0.27	8.64
13	12	G1202	1/2" x 2" HDG HEX BOLT GR5	2 in	0.18	2.11
14	156	G12FW	1/2" HDG USS FLATWASHER	3/32 in	0.03	5.32
15	156	G12LW	1/2" HDG LOCKWASHER	1/8 in	0.01	2.17
16	156	G12NUT	1/2" HDG HEAVY 2H HEX NUT		0.07	11.17
17	12	SS38R-8	3/8" X 8" THREADED ROD (STAINLESS STEEL)		0.25	3.01
18	24	SQW38	3/8" SQUARE WASHER	2 in	0.29	6.94
19	24	SS38LW	3/8" SS LOCKWASHER		0.01	0.16
20	24	SS38NUT	3/8" SS HEX NUT		0.02	0.44
					TOTAL WT. #	1049.24

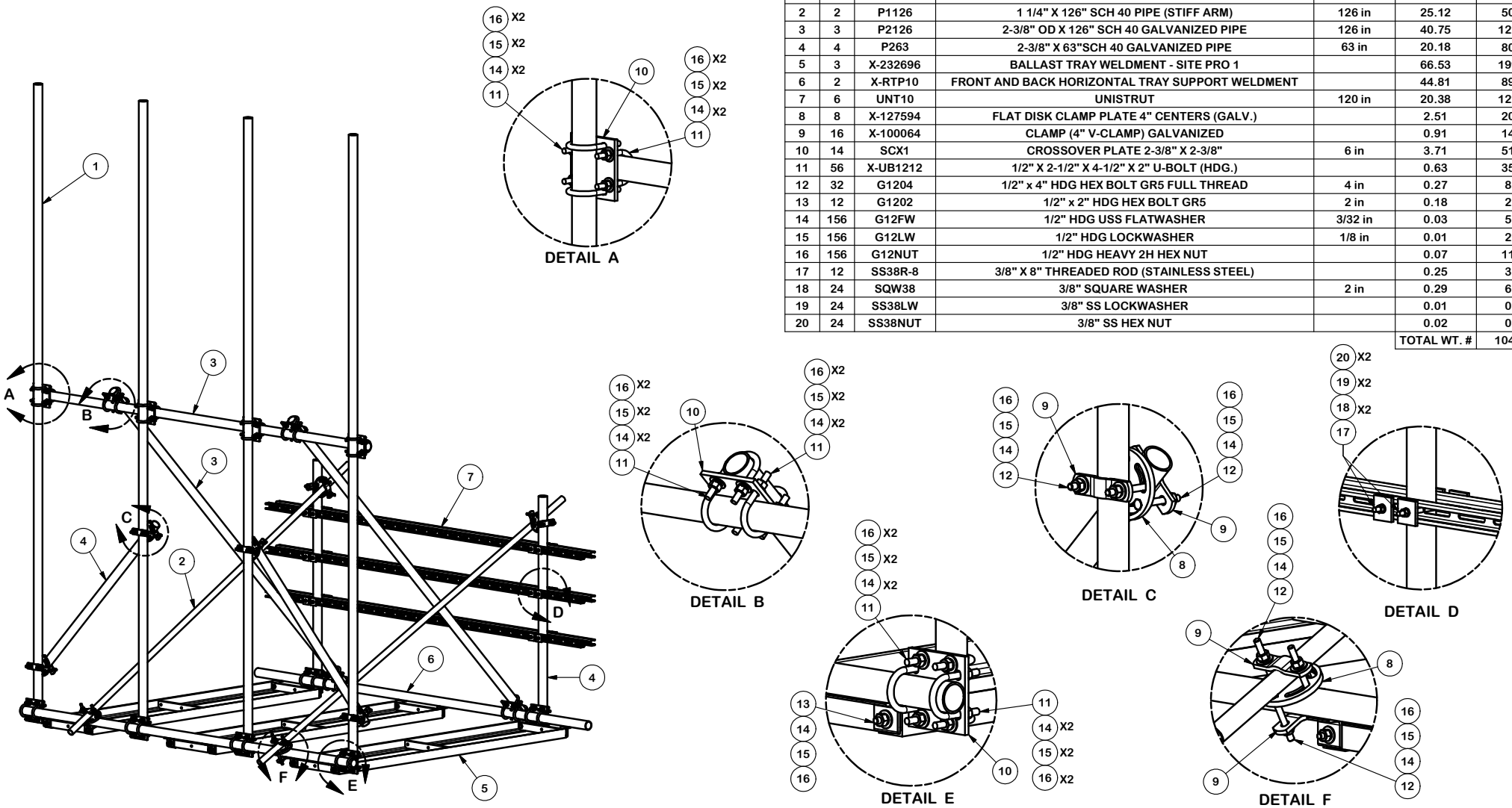

TOLERANCE NOTES

TOLERANCES ON DIMENSIONS, UNLESS OTHERWISE NOTED ARE:
SAWED, SHEARED AND GAS CUT EDGES *(± 0.030")*
DRILLED AND GAS CUT HOLES *(± 0.030")* - NO CONING OF HOLES
LASER CUT EDGES AND HOLES *(± 0.010")* - NO CONING OF HOLES
BENDS ARE ± 1/2 DEGREE
ALL OTHER MACHINING *(± 0.030")*
ALL OTHER ASSEMBLY *(± 0.060")*

PROPRIETARY NOTE:
THE DATA AND TECHNIQUES CONTAINED IN THIS DRAWING ARE PROPRIETARY INFORMATION OF VALMONT INDUSTRIES AND CONSIDERED A TRADE SECRET. ANY USE OR DISCLOSURE WITHOUT THE CONSENT OF VALMONT INDUSTRIES IS STRICTLY PROHIBITED.

DESCRIPTION
3 LEVEL
RRU / EQUIPMENT RACK
FOR RTP FRAMES

SITE PRO 1
A valmont COMPANY

Engineering Support Team:
1-888-753-7446

Locations:
New York, NY
Atlanta, GA
Los Angeles, CA
Plymouth, IN
Salem, OR
Dallas, TX

CPD NO.	DRAWN BY	ENG. APPROVAL	PART NO.
	CEK 4/23/2015		RTP10-3RRU

CLASS	SUB	DRAWING USAGE	CHECKED BY	DWG. NO.
81	01	CUSTOMER	BMC 4/24/2015	RTP10-3RRU

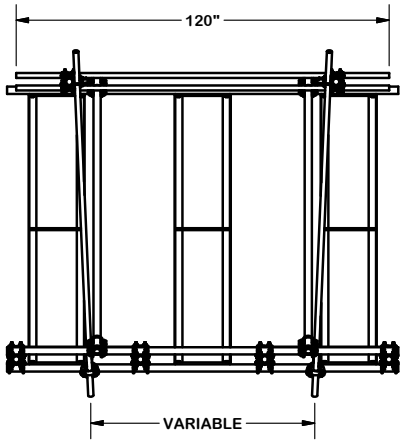

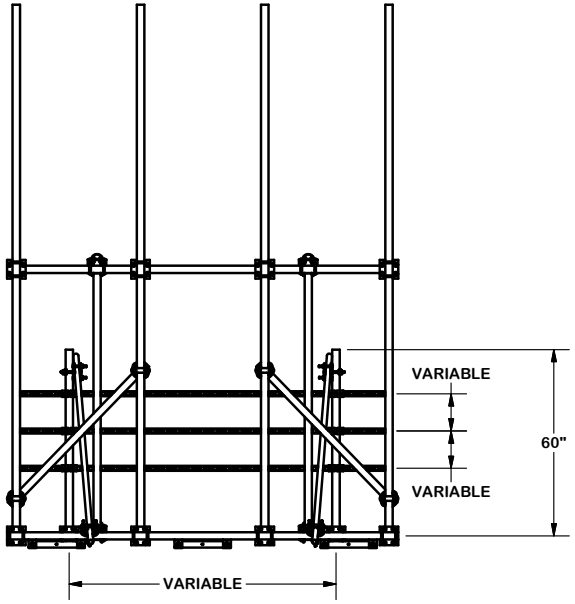

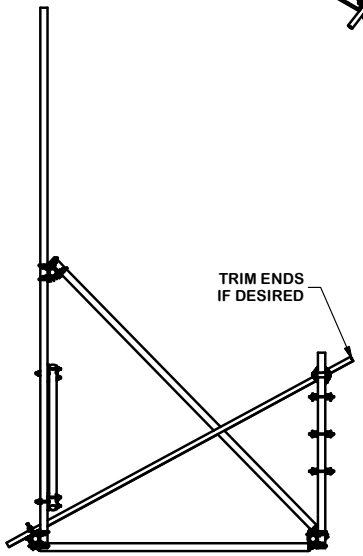

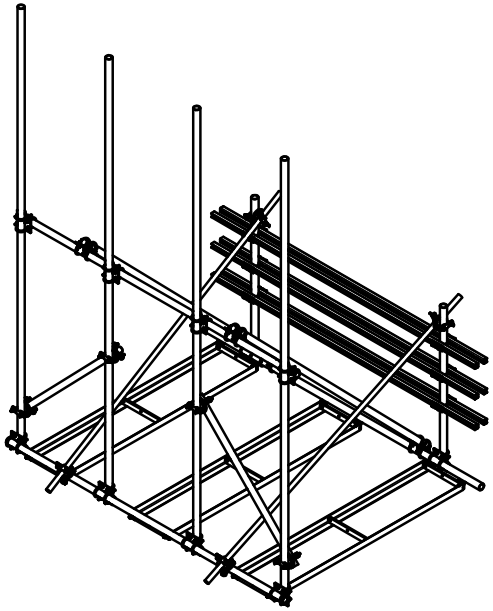

TOLERANCE NOTES

TOLERANCES ON DIMENSIONS, UNLESS OTHERWISE NOTED ARE:
SAWED, SHEARED AND GAS CUT EDGES *(± 0.030")*
DRILLED AND GAS CUT HOLES *(± 0.030")* - NO CONING OF HOLES
LASER CUT EDGES AND HOLES *(± 0.010")* - NO CONING OF HOLES
BENDS ARE ± 1/2 DEGREE
ALL OTHER MACHINING *(± 0.030")*
ALL OTHER ASSEMBLY *(± 0.060")*

PROPRIETARY NOTE:
THE DATA AND TECHNIQUES CONTAINED IN THIS DRAWING ARE PROPRIETARY INFORMATION OF VALMONT INDUSTRIES AND CONSIDERED A TRADE SECRET. ANY USE OR DISCLOSURE WITHOUT THE CONSENT OF VALMONT INDUSTRIES IS STRICTLY PROHIBITED.

DESCRIPTION
3 LEVEL
RRU / EQUIPMENT RACK
FOR RTP FRAMES

SITE PRO 1
A valmont COMPANY

Engineering Support Team:
1-888-753-7446

Locations:
New York, NY
Atlanta, GA
Los Angeles, CA
Plymouth, IN
Salem, OR
Dallas, TX

CPD NO.	DRAWN BY	ENG. APPROVAL	PART NO.
	CEK 4/23/2015		RTP10-3RRU

CLASS	SUB	DRAWING USAGE	CHECKED BY	DWG. NO.
81	01	CUSTOMER	BMC 4/24/2015	RTP10-3RRU

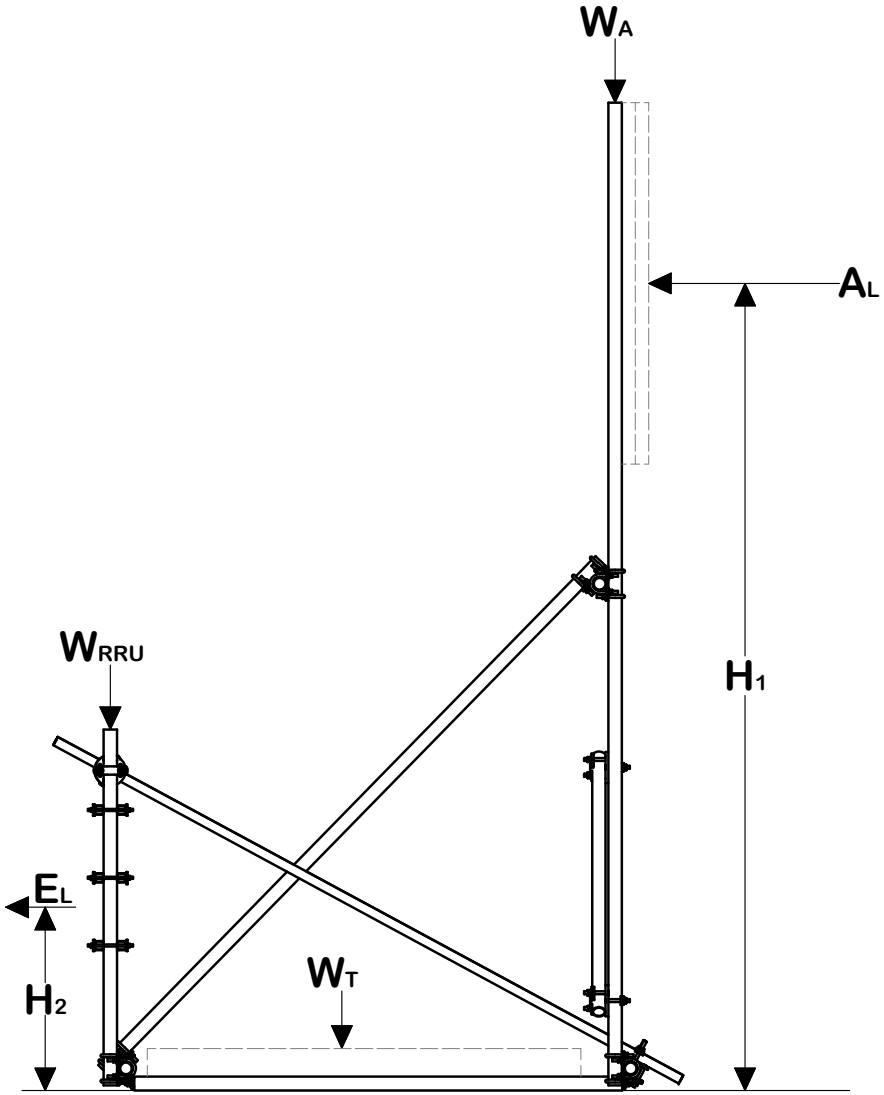

RTP FRAMES & RTP-RRU BALLAST EQUATIONS

BALLAST EQUATION WITH 1.5 SAFETY FACTOR:

$$\text{FRONT WIND} = W_T = \frac{(((A_L*H_1)+(E_L*H_2))1.5) - (W_A*7.25)}{3.625}$$

$$\text{BACK WIND} = W_T = \frac{(((A_L*H_1)+(-E_L*H_2))1.5) - (W_{RRU}*7.25)}{3.625}$$

BALLAST EQUATION WITH REV. G LOADING:

$$\text{FRONT WIND} = W_T = \frac{(((A_L*H_1)+(E_L*H_2))1.6) - (W_A*7.25)}{3.625\ (0.9)}$$

$$\text{BACK WIND} = W_T = \frac{(((A_L*H_1)+(-E_L*H_2))1.6) - (W_{RRU}*7.25)}{3.625\ (0.9)}$$

$$W = WT / 3$$

E_L	= EQUIPMENT LOAD (NON-FACTORED)	lbs
A_L	= ANTENNA LOAD (NON-FACTORED)	lbs
H_1 & H_2	= HEIGHT FROM ROOFTOP	ft
W_T	= TOTAL BALLAST WEIGHT	lbs
W	= BALLAST WEIGHT PER TRAY	lbs
W_{RRU}	= 200 + EQUIPMENT WEIGHT	lbs
W_A	= 260 + ANTENNA WEIGHT	lbs

TOLERANCE NOTES

TOLERANCES ON DIMENSIONS, UNLESS OTHERWISE NOTED ARE:
SAWED, SHEARED AND GAS CUT EDGES *(± 0.030")*
DRILLED AND GAS CUT HOLES *(± 0.030")* - NO CONING OF HOLES
LASER CUT EDGES AND HOLES *(± 0.010")* - NO CONING OF HOLES
BENDS ARE ± 1/2 DEGREE
ALL OTHER MACHINING *(± 0.030")*
ALL OTHER ASSEMBLY *(± 0.060")*

PROPRIETARY NOTE:
THE DATA AND TECHNIQUES CONTAINED IN THIS DRAWING ARE PROPRIETARY INFORMATION OF VALMONT INDUSTRIES AND CONSIDERED A TRADE SECRET. ANY USE OR DISCLOSURE WITHOUT THE CONSENT OF VALMONT INDUSTRIES IS STRICTLY PROHIBITED.

DESCRIPTION: 3 LEVEL RRU / EQUIPMENT RACK FOR RTP FRAMES

SITE PRO 1 — A valmont COMPANY

Engineering Support Team: 1-888-753-7446

Locations: New York, NY; Atlanta, GA; Los Angeles, CA; Plymouth, IN; Salem, OR; Dallas, TX

CPD NO.	DRAWN BY	ENG. APPROVAL	PART NO.
	CEK 4/23/2015		RTP10-3RRU

CLASS	SUB	DRAWING USAGE	CHECKED BY	DWG. NO.
81	01	CUSTOMER	BMC 4/24/2015	RTP10-3RRU

PARTS LIST						
ITEM	QTY	PART NO.	PART DESCRIPTION	LENGTH	UNIT WT.	NET WT.
1	1	SCX2	CROSSOVER PLATE	7 in	4.80	4.80
2	2	X-UB1300	1/2" X 3" X 5" X 2" U-BOLT (HDG.)		0.66	1.31
3	8	G12FW	1/2" HDG USS FLATWASHER		0.03	0.27
4	8	G12LW	1/2" HDG LOCKWASHER		0.01	0.11
5	8	G12NUT	1/2" HDG HEAVY 2H HEX NUT		0.07	0.57
6	2	X-UB1212	1/2" X 2-1/2" X 4-1/2" X 2" U-BOLT (HDG.)		0.63	1.25
					TOTAL WT. #	8.39

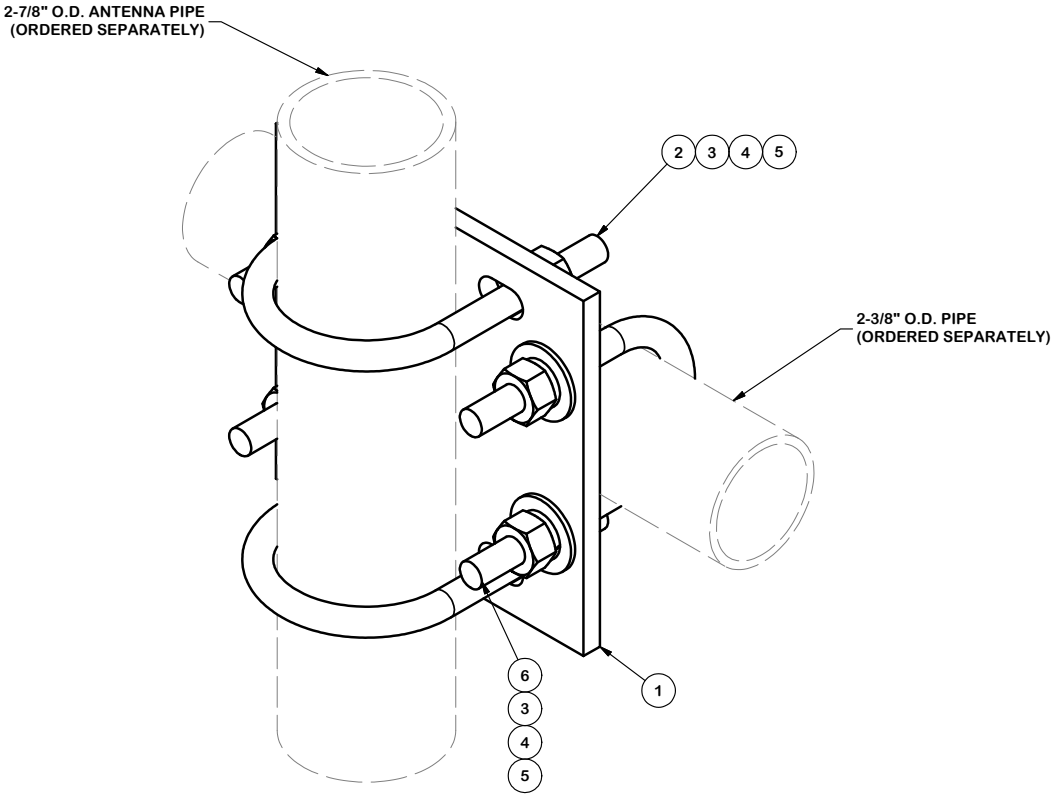

TOLERANCE NOTES

TOLERANCES ON DIMENSIONS, UNLESS OTHERWISE NOTED ARE:
SAWED, SHEARED AND GAS CUT EDGES *(± 0.030")*
DRILLED AND GAS CUT HOLES *(± 0.030")* - NO CONING OF HOLES
LASER CUT EDGES AND HOLES *(± 0.010")* - NO CONING OF HOLES
BENDS ARE ± 1/2 DEGREE
ALL OTHER MACHINING *(± 0.030")*
ALL OTHER ASSEMBLY *(± 0.060")*

PROPRIETARY NOTE:
THE DATA AND TECHNIQUES CONTAINED IN THIS DRAWING ARE PROPRIETARY INFORMATION OF VALMONT INDUSTRIES AND CONSIDERED A TRADE SECRET. ANY USE OR DISCLOSURE WITHOUT THE CONSENT OF VALMONT INDUSTRIES IS STRICTLY PROHIBITED.

DESCRIPTION: CROSSOVER PLATE KIT

SITE PRO 1
A valmont COMPANY
Engineering Support Team: 1-888-753-7446
Locations: New York, NY; Atlanta, GA; Los Angeles, CA; Plymouth, IN; Salem, OR; Dallas, TX

CPD NO.	DRAWN BY	ENG. APPROVAL	PART NO.
	CEK 6/30/2011		SCX2-K

CLASS	SUB	DRAWING USAGE	CHECKED BY	DWG. NO.
		SHOP	BMC 7/1/2011	SCX2-K

Tectonic
PRACTICAL SOLUTIONS. EXCEPTIONAL SERVICE.

Date: **June 8, 2021**

Structural Opinion Letter

Project Information:

Carrier:		Sprint T-Mobile
Scope of Work:		"Sprint Retain"
Site Name:		Former Firstation
Site Address:		[illegible] East Main Street, Amsterdam [illegible]
Site Type:		Rooftop Mounted Equipment

Tectonic Project Number: [illegible]
Sprint/T-Mobile Site ID Number: [illegible]

Tectonic Engineering Consultants, Geologists & Land Surveyors, D.P.C. [illegible] **Structural Opinion Letter**" [illegible] determine [illegible] structural [illegible] mentioned [illegible] structure. [illegible] performed [illegible] limited [illegible] opinion [illegible] structure [illegible] In addition [illegible] document [illegible] purpose [illegible] letter.

- Construction Drawings [illegible] Rev [illegible] dated [illegible]
- RFD [illegible] dated [illegible]
- Preliminary Construction Drawings [illegible] Tech Engineering [illegible] dated [illegible]
- DFP [illegible] dated [illegible]

[illegible] existing structural opinion and information provided [illegible] Sprint T-Mobile current [illegible] existing cabinets [illegible] RFDS [illegible] approximately [illegible] three feet (93'-0") above ground level. Sprint/T-Mobile [illegible] proposed [illegible] existing cabinets [illegible] it [illegible] new [illegible] cabinets. The [illegible] structural [illegible] equipment [illegible]

Mounting Level (ft)	Carrier Designation	Number of Cabinets	Cabinet Manufacturer	Cabinet Model	Note
[illegible]	Sprint T-Mobile	[illegible]	-	MMBTS Cabinet	[illegible]
		[illegible]	-	[illegible] Cabinet	
		[illegible]	Ericsson	B160	[illegible]
		[illegible]	Ericsson	6160	

Note:
[illegible] Existing cabinets to be removed.
[illegible] Proposed cabinets to be placed in the existing equipment platform.

Project Contact Info

1279 Route 300 | Newburgh, NY 12550
845.567.6656 Tel | 845.567.8703 Fax

tectonicengineering.com
Equal Opportunity Employer

Tectonic

PRACTICAL SOLUTIONS. EXCEPTIONAL SERVICE.

T□e□urrent□□□□inet□equipment□□□n□i□ur□ti□n□□□n□i□t□□□□t□□□□□□e□i□tin□□□□□inet□□□nd□□i□□□e□rem□□ed□□nd□ rep□□□ed□□it□t□ □□□□□ne□□□□□inet□□□□□□□□nd□□□□□□□□ it□t□e□pr□p□□ed□equipment□t□ere□□i□□□e□□□□ei□□t□de□re□□e□ □□□□□□□□□p□und□□t□ere□□re□t□e□□ui□din□□□tru□ture□i□□□dequ□te□t□□□upp□rt□t□e□pr□p□□ed□□□□inet□□□□□

T□i□□□tru□tur□□□□pini□n□i□□□□□ed□n□□□imited□□i□u□□in□pe□ti□n□□nd□in□□rm□ti□n□pr□□ided□□□□t□e□□ient□□□ e□□□□ume□ t□□t□t□e□□ui□din□□□□nd□it□□□□und□ti□n□□ere□□□n□tru□ted□in□□□□□rd□n□e□□it□□t□e□□ppr□□ed□de□i□n□dr□□in□□□□t□e□ □ui□din□□□tru□ture□□□□□□een□pr□per□□m□int□ined□in□□□□□rd□n□e□□it□□t□e□□ppi□□□e□□ui□din□□□de□□□nd□□□e□i□tin□□ mem□er□□□nd□□□nne□ti□n□□□re□int□□t□□□□ntr□□t□r□□□□□□ie□d□eri□□e□i□tin□□□nditi□n□□□nd□re□□mmend□ti□n□□□□ n□ted□□n□t□e□□□n□tru□ti□n□dr□□in□□□□nd□n□ti□□t□e□de□i□n□en□ineer□□□□n□di□□rep□n□ie□pri□r□t□□□n□tru□ti□n□□□n□□ □urt□er□□□□n□e□t□t□e□□ntenn□□□□ppurten□n□e□□□nd□r□equipment□□□n□i□ur□ti□n□□□□u□d□e□re□ie□ed□□it□re□pe□t□ t□□t□eir□e□e□t□□n□t□e□□tru□tur□□□□□d□pri□r□t□imp□ement□ti□n□□□□

□ e□□t□Te□t□ni□□□ppre□i□te□t□e□□pp□rtunit□□□□pr□idin□□□ur□□□ntinuin□pr□e□□i□n□□□er□i□e□t□□□u□nd□□ □print□T□M□□ie□l□□□□u□□□□e□□n□que□ti□n□□□r□need□urt□er□□□i□t□n□e□n□t□i□□r□n□□t□er□pr□e□t□p□e□□e□i□e□u□□ □□□□□□□

□

Re□pe□t□u□□□□u□mitted□□□□

Tectonic Engineering Consultants, Geologists & Land Surveyors, D.P.C.

Ed□□rd□□□□□□□mi□e□i□□P□E□□□
M□n□□in□□Dire□t□r□□□□tru□tur□□□

Project Contact Info

1279 Route 300 | Newburgh, NY 12550
845.567.6656 Tel | 845.567.8703 Fax

tectonicengineering.com
Equal Opportunity Employer

Agency Use Only [If applicable]

Project: 21-24P, 27-31 Main St

Date: 7/28/2021

Short Environmental Assessment Form
Part 2 - Impact Assessment

Part 2 is to be completed by the Lead Agency.
Answer all of the following questions in Part 2 using the information contained in Part 1 and other materials submitted by the project sponsor or otherwise available to the reviewer. When answering the questions the reviewer should be guided by the concept "Have my responses been reasonable considering the scale and context of the proposed action?"

	No, or small impact may occur	Moderate to large impact may occur
1. Will the proposed action create a material conflict with an adopted land use plan or zoning regulations?	✓	
2. Will the proposed action result in a change in the use or intensity of use of land?	✓	
3. Will the proposed action impair the character or quality of the existing community?	✓	
4. Will the proposed action have an impact on the environmental characteristics that caused the establishment of a Critical Environmental Area (CEA)?	✓	
5. Will the proposed action result in an adverse change in the existing level of traffic or affect existing infrastructure for mass transit, biking or walkway?	✓	
6. Will the proposed action cause an increase in the use of energy and it fails to incorporate reasonably available energy conservation or renewable energy opportunities?	✓	
7. Will the proposed action impact existing: a. public / private water supplies?	✓	
b. public / private wastewater treatment utilities?	✓	
8. Will the proposed action impair the character or quality of important historic, archaeological, architectural or aesthetic resources?	✓	
9. Will the proposed action result in an adverse change to natural resources (e.g., wetlands, waterbodies, groundwater, air quality, flora and fauna)?	✓	
10. Will the proposed action result in an increase in the potential for erosion, flooding or drainage problems?	✓	
11. Will the proposed action create a hazard to environmental resources or human health?	✓	

PRINT FORM

Agency Use Only [If applicable]

Project: 21-24P, 27-31 Main St

Date: 7/28/2021

Short Environmental Assessment Form
Part 3 Determination of Significance

For every question in Part 2 that was answered "moderate to large impact may occur", or if there is a need to explain why a particular element of the proposed action may or will not result in a significant adverse environmental impact, please complete Part 3. Part 3 should, in sufficient detail, identify the impact, including any measures or design elements that have been included by the project sponsor to avoid or reduce impacts. Part 3 should also explain how the lead agency determined that the impact may or will not be significant. Each potential impact should be assessed considering its setting, probability of occurring, duration, irreversibility, geographic scope and magnitude. Also consider the potential for short-term, long-term and cumulative impacts.

☐ Check this box if you have determined, based on the information and analysis above, and any supporting documentation, that the proposed action may result in one or more potentially large or significant adverse impacts and an environmental impact statement is required.

☑ Check this box if you have determined, based on the information and analysis above, and any supporting documentation, that the proposed action will not result in any significant adverse environmental impacts.

City of Amsterdam	7/28/2021
Name of Lead Agency	Date
Paul Gavry	Planning Commission Chairman
Print or Type Name of Responsible Officer in Lead Agency	Title of Responsible Officer
Signature of Responsible Officer in Lead Agency	Signature of Preparer (if different from Responsible Officer)

PRINT FORM

REFERRAL FORM
MONTGOMERY COUNTY PLANNING BOARD

Referral Number_____
assigned by the MCPB upon acceptance of referral for review

This Referral must be received **SEVEN CALENDAR DAYS** prior to the MCPB meeting date in order for it to be placed on the agenda.

TO: Montgomery County Planning Board,
Old County Courthouse,
PO Box 1500, Fonda, New York 12068
Phone: 518-853-8334
Fax: 518-853-8336

FROM: Municipal Board:_____
Referring Officer:_____
Mail original resolution to:_____

1. **Applicant:** Town of Amsterdam **2. Site Address:** _____
3. **Tax Map Number(s):** _____ **4. Acres:** _____
5. **Is the site currently serviced by public water?** ☐ Yes ☐ No
6. **On-site waste water treatment is currently provided by:** ☐ Public Sewer or ☐ Septic System
7. **Current Zoning:** _____ **8. Current Land Use:** _____
9. **Project Description:** Zoning Law Amendment Solar

10. **MCPB Jurisdiction:**

☒ **Text Adoption or Amendment** ☐ **Site is located within 500' of:** _____

- ☒ a municipal boundary.
- ☒ a State or County thruway/highway/roadway
- ☐ an existing or proposed State or County park/recreation area
- ☐ an existing or proposed County-owned stream or drainage channel
- ☐ a State or County-owned parcel on which a public building or institution is situated
- ☒ a farm operation within an Agricultural District (Incl. Ag data Statement) (does not apply to area variances)

11. **PUBLIC HEARING:** Date: 08-18-2021 Time: 5:50 pm Location: Amsterdam Town Hall 283 Mannyscors Rd Amsterdam, NY 12010

Referred Action(s)

If referring multiple, related actions, please identify the referring municipal board if different from above.

12. ☒ **Text Adoption or** ☒ **Amendment** **Referring Board:**

☐ Comprehensive Plan ☒ Local Law ☒ Zoning Ordinance ☐ Other _____

13. ☐ **Zone Change** **Referring Board:** Town of Amsterdam Town Bd + Planning

Proposed Zone District: _____ Number of Acres: _____

Purpose of the Zone Change: _____

14. ☐ **Site Plan** ☐ **Project Site Review** **Referring Board:**

Proposed Improvements: _____

Proposed Use: _____

Will the proposed project require a variance? ☐ Yes ☐ No Type: ☐ Area ☐ Use

Specify: _____

Is a State of County DOT work permit needed? If Yes : ☐ State or ☐ County ☐ No

Specify: _____

15. ☐ **Special Permit** **Referring Board:**

Section of local zoning code that requires a special permit for this use: _____

Will the proposed project require a variance? ☐ Yes ☐ No Type: ☐ Area ☐ Use

16. Variance **Referring Board:**

☐ Area ☐ Use

Section(s) of local zoning code to which the variance is being sought: _____

Describe how the proposed project varies from the above code section: _____

_____

SEQR Determination

Action:

- ☒ Type I
- ☐ Type II
- ☐ Unlisted Action
- ☐ Exempt

Finding:

- ☐ Positive Declaration – Draft EIS
- ☐ Conditional Negative Declaration
- ☐ Negative Declaration
- ☐ No Finding (Type II Only)

SEQR determination made by (Lead Agency): _____ **Date**: _____

REQUIRED MATERIAL

Send 3 copies of a "Full Statement of the Proposed Action" which includes:

All materials required by and submitted to the referring body as an application

- If submitting site plans, please submit only 1 large set of plans, and 12 11x17 packets.
- All material may be submitted digitally as well at http://www.mcbdc.org/planning-services/montgomery-county-planning-board-referrals/

This referral, as required by GML §239 l and m, includes complete information, and supporting materials to assist the Montgomery County Planning Board (MCPB) in its review. Recommendations by MCPB shall be made to the Referring Body within thirty days of receipt of the Full Statement.

Linda Bartkewe Hughes, Town Clerk

Name, Title & Phone Number of Person Completing this Form

08-09-2021

Transmittal Date

This side to be completed by Montgomery County Planning.

REFERRAL FORM
MONTGOMERY COUNTY PLANNING BOARD

TO: _____

Receipt of 239-m referral is acknowledged on _____. Please be advised that the Montgomery County Planning Board has reviewed the proposal stated on the opposite side of this form on _____ and makes the following recommendation.

☐ Approves

☐ Approves (with Modification)

☐ Disapproves:

☐ No significant County-wide or inter-community input

☐ Not subject to Planning Board review

☐ Took no action

Section 239-m of the General Municipal Law requires that within thirty days after final action by the municipality is taken; a report of the final action shall be filed with the County Planning Board.

_____
Date

_____
Kenneth F. Rose, Director
Montgomery County Dept. of Economic
Development and Planning

283 Manny's Corners Road
Amsterdam, New York 12010

Telephone: (518) 842-7961
Fax No. (518) 843-6136

TOWN OF AMSTERDAM
NOTICE OF PUBLIC HEARING
PROPOSED LOCAL LAW NO. 5 OF 2021

Amending the Town of Amsterdam Zoning Law
To Regulate Solar Energy Systems

NOTICE IS HEREBY GIVEN that the Amsterdam Town Board will hold a public hearing on proposed Local Law No. 5 of 2021, on August 18th at 5:50 pm at the Amsterdam Town Hall, 283 Manny's Corners Road, Amsterdam, New York 12010.

Proposed Local Law No. 5 of 2021 amends the zoning law of the Town of Amsterdam as follows: Article VIII of the Town of Amsterdam Zoning Ordinance is hereby amended by repealing and replacing the section, designated as Section 35, No . 2 and Utility-Scale Solar Energy Systems, and Schedule A, Permitted Zones for Utility-Scale Solar to be permitted only in the B-1 (Business), B-2 (Restricted Business), and M-1 (Manufacturing/Mixed Use zoning districts of the Town of Amsterdam Zoning Law.

A copy of the proposed Local Law No. 5 is available for public inspection at the Office of the Town Clerk, 283 Manny's Corners Road, Amsterdam, NY during regular business hours, Monday-Thursday from 9 am – 4 pm and Friday from 9 am – 1 pm.

Any persons wising to speak may be heard at said time and place.

BY ORDER OF THE TOWN BOARD

Linda Bartone Hughes, Town Clerk
Town of Amsterdam

To be published in The Recorder on Saturday, August 7th.

283 Manny's Corners Road
Amsterdam, New York 12010

Telephone: (518) 842-7961
Fax No. (518) 843-6136

July 12, 2021

TO: Supervisor DiMezza and Town Board

FROM: Town of Amsterdam Planning Board

RE: Proposed Solar Law Amendment

At our monthly meeting on July 7, 2021 the Planning Board members, Town attorney, Chuck Schwartz and Town Engineer, Kevin Schwenzfeier from Delaware Engineering discussed the proposed solar law amendments. Kevin Schwenzfeier incorporated the Planning Board recommendations into a draft of local law to amend the town zoning regulations related to solar projects.

The Planning Board is now sending these recommendations to the members of the Town Board for your review.

Attached is a copy of the Planning Board proposed solar law amendments.

A motion was made to recommend the proposed solar law amendments to the Town Board.

Motion by: Kelly Joyce
Second by: Mike Anostario

All board members unanimously approved the motion.

Respectfully submitted.

Brent Phetteplace
Chairman Planning Board

Town of Amsterdam Proposed Solar Law Amendment

July 7th, 2021

Section 1. Legislative Intent

It is the intent of this local law to amend the Town of Amsterdam Zoning Ordinance, as may have been amended from time to time, to include provisions that address the installation of solar energy systems, as defined in this law, within the municipal boundaries of the Town of Amsterdam. This local law is not intended to apply to applications approve prior to the effective date of this local law.

Section 2. Authority

This local law is adopted by the Town Board of Town of Amsterdam (hereinafter referred to as the "Town Board") pursuant to its authority to adopt local laws under Article IX of the New York State Constitution; Articles 2 and 3 of the Municipal Home Rule Law; Article I of the Town Zoning Law, particularly Section 2 which authorize the Town to adopt zoning provisions that promote health and general welfare, encourage the most appropriate use of land throughout the Town, encourage development in accord with a comprehensive plan and professional planning techniques, and improve the quality of life throughout the Town; and Section 35.A.1. of Article VIII "to balance the benefits of solar energy collection with the unique characteristics of each site, and prevent potential impacts on neighboring properties."

Section 3. Severability

If a court determines that any clause, sentence, paragraph, subdivision, or part of this local law or the application thereof to any person, firm or corporation, or circumstance is invalid or unconstitutional, the court's order or judgment shall not affect, impair, or invalidate the remainder of this local law, but shall be confined in its operation to the clause, sentence, paragraph, subdivision, or part of this local law or in its application to the person, individual, firm or corporation or circumstance, directly involved in the controversy in which such judgment or order shall be rendered.

Section 4. Effective Date

This local law shall take effect immediately upon filing with the Secretary of State and shall not apply to applications approved prior to the effective date of this local law.

Section 5. Amendment

Article VIII of the Town of Amsterdam Zoning Ordinance is hereby amended by repealing and replacing the section, designated as "Section 35.2.", to said Article VIII to read as follows:

2. Utility-Scale Solar Energy Systems

A. Town Policy Statement, Purpose, and Intent

1. Introduction: The following policy statement regarding utility-scale solar energy systems is in addition to, and does not necessarily supersede, the general land use policies set forth in the Zoning Ordinance. Where policies conflict, the policies set forth in this section control only as they pertain to utility-scale solar energy systems.

2. In General: The Town of Amsterdam supports sustainable renewable energy sources such as solar energy and does not seek to discourage such energy sources to be installed in the Town. However, like any land use, solar energy systems have impacts on the community and neighboring properties which the Town seeks to mitigate so as not to adversely affect the Town's unique character nor impinge on properties within the Town. As such, the Town finds that small scale solar energy systems which are accessory to the primary use of the parcel and are installed for the primary purpose of supplying electricity to the buildings located on that parcel is in keeping with the Town's Comprehensive Plan and land use policies. Such accessory systems are to be encouraged so long as they do not impact neighboring properties, are safely installed, do not impair emergency access and are removed when no longer used.

3. Specific Policies: With respect to what is defined herein as Utility-Scale Solar Energy Systems, the Town is concerned with the potential scale and location of such Systems not fitting in with the existing community character. However, with proper guidelines, criteria and planning, Utility-Scale Solar Energy Systems of a limited size may be appropriate but would have to be reviewed on a case-by-case basis. These Systems are to be encouraged and allowed so long as they fit in with the Town's community character, do not impact neighboring properties, are safely installed and operated, and do not impair scenic views or vistas, future growth, or economic development of the Town, and are appropriately and promptly removed upon decommissioning. Placement of Utility-Scale Solar Energy Systems in existing fields or areas that do not require significant deforestation or clear cutting and are well-screened from public views as well as nearby properties would increase the possibility of compatibility with the Town's community character and decrease the possibility of significant adverse impacts. It is recognized by the Town that certain scenic views and vistas are important to the Town and should be preserved since they significantly contribute to the Town's rural residential character. The layout of the solar panels and equipment should utilize existing natural features for screening and should avoid detrimental impacts to important natural resources such as wetlands, streams and other surface waters, prime agricultural soils, areas important for outdoor recreation and tourism, historic districts and buildings, home and property values, and the aesthetics of the Town's natural environment. The following regulations are intended to ensure that Utility-Scale Solar Energy Systems are only allowed of a scale, location and plan that appropriately recognizes the aforementioned land use policies, as well as the policies set forth in the Town's Comprehensive Plan and Zoning Ordinance.

B. Bulk and Area Requirements

1) Height.

a) The total height of the solar collector arrays and mounting system shall not exceed 20 feet from the ground elevation when oriented at maximum tilt.

b) All buildings and accessory structures associated with the utility-scale solar energy system shall have a maximum height of 15 feet.

2) Setbacks.

All utility-scale solar energy systems and associated buildings, fences, accessory structures, and equipment shall be setback at a minimum of one hundred (100) feet from all of the parcel's boundary lines, wetlands, ponds and streams.

3) Lot Coverage.

a) The maximum permitted lot coverage for a utility-scale solar energy system is 50% of the site.

b) For the purpose of this section, lot coverage shall include the total surface area of the solar panel arrays and the footprints of all buildings and accessory structures.

c) If the area in which the Solar Energy System is to be placed is leased, then the terms "lots" and "entire lot size" shall mean the land area that is leased.

4) Minimum Lot Size.

Utility-Scale Energy Systems shall only be located on lots with a minimum lot size of twenty (20) acres.

5) System Size.

The size of the Solar Energy System shall be limited to a maximum of 5MW of AC electrical energy generation per design at peak levels of operation or the land surface area covered by the Solar Energy System including internal access roads, Solar Panels and all System components and Solar Equipment.

C. General Provisions

1. Permitted Zones: Utility-Scale Solar Energy Systems are permitted only in the B-1 (Business), B-2 (Restricted Business), and M-1 (Manufacturing/Mixed Use) zoning districts of the Town of Amsterdam and only upon issuance of a special use permit and site plan approval and compliance with the general standards and requirements in these regulations as well as the following requirements and standards. As is set forth below, the size of a Utility-Scale Solar Energy System is restricted in the Town of Amsterdam. The reason for restriction is that the Town's current community character and economic well-being is dependent upon its natural resources and setting, its scenic views, its historic places and buildings, its agricultural history and its outdoor recreation and tourism opportunities. The future of the Town in terms of both its economy and the welfare of its residents depends on the continual preservation and promotion of such vital aspects of the Town. In this regard, the Town Board specifically finds that any Utility-Scale Solar Energy System greater in size than what is allowed by special use permit or otherwise as is set forth

herein will be contrary to the community character and the future economic viability of the Town and would unreasonably burden the residents, taxpayers and the electric rate payers of the Town of Amsterdam. The aforementioned policies and findings are based upon, supported by, and consistent with the Town of Amsterdam's Comprehensive Plan.

2. Application Requirements.

a) Applications for a special use permit shall be submitted to the Planning Board for an initial review of completeness; once the Planning Board determines that an application is complete, it will then commence its review and action, which can include approval, approval on conditions, or denial; following approval, or approval on conditions, the application will be subject to site plan review by the Planning Board.

b) Special Use Permit Application Requirements. For a Utility-Scale Solar Energy System, both the site plan and special permit applications, and required application materials, fees and submissions, are to be used in keeping with the relevant Articles of this Law, and supplemented by the following requirements:

i) If the property of the proposed project is to be leased, legal consent and lease agreement(s) between all parties, specifying the use(s) of the land for the duration of the project, including easements and other agreements, shall be submitted.

ii) Blueprints showing the layout of the Solar Energy System signed by a Professional Engineer or Registered Architect shall be required.

iii) The equipment specification sheets shall be documented and submitted for all photovoltaic panels, significant components, mounting systems, and inverters that are to be installed.

iv) A full environmental assessment form with Part 1 completed.

v) A Visual Impact Assessment report including modeling and photographic assessment of the visibility from key viewpoints, along with photo simulations including array equipment. In addition, the report shall include viewshed simulations from off-site residential dwellings from both the first and second floors.

vi) A Glare Analysis which demonstrates the duration of glare per day for each day of the year including a graphical comparison summary.

vii) Storm water runoff calculations and drainage plan prepared by a professional engineer licensed in the State of New York.

viii) The location and extent of natural resources and other significant features of the site including but not limited to the following: streams, wetlands, ponds, prime agricultural soils, flood plain, rock outcroppings, and extent of clearing of mature trees, existing or proposed easements or right-of-way.

ix) Landscaping/Screening Plan and Planting Schedule. Such plan shall describe the methods and types of screening that is proposed, including but not limited to existing vegetation, topography, fencing and structures, and also detailing the number, location, size and species of vegetation to be planted on site and the size and extent of berms. Such plan shall also include appropriate

performance criteria specifying minimum vegetation sizes and measures to be taken in the event that the proposed vegetation fails to survive, flourish, or otherwise meet said performance criteria throughout the lifetime of the project.

x) A Land Grading and Vegetation-Clearing Plan with a cut and fill analysis. Existing on-site vegetation designed to be utilized as screening shall be preserved to the maximum extent possible and shall be diligently maintained to protect its vitality. Site plans shall be developed to provide, to the maximum extent possible, for the preservation of nature vegetation in large unbroken blocks that also allows for continuous vegetative spaces to be established when adjacent parcels are developed.

xi) Property Operation and Maintenance Plan. Such plan shall describe continuing photovoltaic maintenance and property upkeep including landscaping, mowing and trimming as well as any agricultural operations that will occur on the site or property once the System is installed.

xii) The Applicant shall provide written confirmation that the electric grid has the capacity to support the energy generated from the proposed Utility-Scale Solar Energy System at its maximum peak design. A location map of the connection point to the grid shall be provided along with a description of any easements or right-of-way, clearing, infrastructure, appurtenances and equipment that may be necessary or required to connect to the grid.

xiii) Decommissioning Plan. To ensure the proper removal of Solar Energy Systems and Equipment, a Decommissioning Plan shall be submitted as part of the application. Compliance with this plan shall be made a condition of the issuance of a special use permit under this Section. The Decommissioning Plan must identify who will be responsible for the removal of the System after the Utility-Scale Solar Energy System is no longer in use. The Decommissioning Plan shall demonstrate how the removal of all infrastructures and the remediation of soil and vegetation shall be conducted to return the parcel to its original state prior to installation. The Plan shall also include an expected timeline for execution. A cost estimate detailing the projected cost of executing the Decommissioning Plan shall be prepared by a Professional Engineer or Contractor. Cost estimations shall take into account inflation. Removal of Solar Energy Systems must be completed in accordance with the Decommissioning Plan. The Town shall also require a decommissioning bond or other financial security in which to finance the cost of such removal and restoration if not removed by the party designated in the plan as the party responsible for removal of the System within the time specified for removal in the Decommissioning Plan.

3. Specific Standards for Utility-Scale Solar Systems as a Special Use.

a) No part of a Utility-Scale Solar Energy System shall be located along ridgelines, on hilltops, or on slopes greater than 12%.

b) All Solar Energy Systems shall be sited and screened in such a manner to have the least possible visual effect on neighboring properties, public roads and recreational areas, important scenic vistas and the general aesthetic environment. Screening by existing topography, trees and vegetation shall be incorporated to the maximum extent practicable and where not practicable screening must be installed such as vegetative berms or deer resistant evergreen plantings or a combination thereof.

c) The solar facility, including any proposed off-site infrastructure, shall be located and screened as to avoid to the maximum extent possible visual impacts as viewed from existing residential dwellings located on nearby parcels, including, but not limited to, contiguous parcels, adjacent parcels and/or parcels located across a street, road, or public right-of-way from the solar facility.

d) A berm, landscape screen, or other opaque enclosure, or any combination thereof acceptable to the Town that is capable of screening the site to the maximum extent possible from the above-descried residential dwellings shall be provide.

e) All solar facilities shall be situated on the project site such that it allows for maximum screening possibilities.

f) All landscaping for screening purposes shall be installed after a rough grading of the project site has been completed and shall be maintained at all times during and after the construction phase.

g) Significant clearing of mature tree growth and hedgerows should be avoided to the maximum extent possible. Installation of Utility-Scale Solar Energy Systems on fields or land areas which do not require significant clear cutting is preferred. In no case shall the Solar Energy System require clear cutting of more than 9 acres. Once the land is cleared and the Solar Energy System is installed, the land disturbed must be reseeded or replanted with a combination of native plant species and native grass. Ground cover of gravel or other non-vegetative cover should only be used for access and internal roads to the maximum extent practicable.

h) Installation of Utility-Scale Solar Energy Systems on land areas which contain prime agricultural soils shall be avoided to the maximum extent possible.

i) The materials used for the Solar Energy System shall not be conducive to glare visible from beyond the lot's boundary lines. The Solar Energy System shall not generate noise or heat detectable from beyond the lot's boundary lines.

j) All Utility-Scale Solar Energy Systems shall be enclosed by fencing no less than 8 feet in height to prevent unauthorized access. Warning signs with the owner's contact information shall be placed on the entrance and perimeter of the fencing. The type of fencing shall be determined by the Planning Board. The fencing may need to be further setback from boundary lines and roads and further screened by any landscaping needed to avoid adverse aesthetic and safety impacts.

k) Any associated structure shall be screened, placed underground, depressed, earth bermed or sited below the ridgeline to the greatest extent feasible, particularly in areas of high visibility, and the same shall be noted in the Site Plan.

l) All utilities serving the site shall be underground, except for those required by the public utility for interconnection to the electric grid.

m) All debris generated from the construction phase of the project must be removed within 30 days of site completion.

n) If solar storage batteries are included in the Solar Energy System, the batteries must be placed in a secure container or enclosure meeting the requirements of the International Building Code, International Fire Prevention Code and NFPA 70. When the batteries are no longer in use, they shall be disposed of in

accordance with the International Building Code, International Fire Prevention Code and NFPA 70 as well as the local laws of the Town, and any other applicable laws or regulations.

o) No artificial light is permitted, unless otherwise required by a federal, state or local authority or regulation. Exterior lighting may be provided for associated accessory structures and access entrances as may be determined appropriate for security purposes only. If lighting is proposed a lighting plan shall be included with the Site Plan that is compliant with lighting standards set forth in the Zoning Ordinance.

p) The applicant shall indicate on a site plan all existing and proposed access to the site, including road, electric power, emergency access, land-based telephone line connection, and other utilities existing and proposed within the property boundaries of the proposed location. Existing roadways shall be used for access to the site whenever possible.

q) Review and approval of the application by the nearest fire department for accessibility of emergency vehicles and equipment is required prior to site plan review.

r) Any application under this Section shall meet any provisions, requirements and standards contained in the Zoning Ordinance that, in the judgment of the Planning Board, are applicable to the Utility-Scale Solar Energy System Solar Energy System being proposed. In no instance shall the following Special Use Permit Standards be waived:

i) The proposed development is compatible with nearby properties and will not discourage the appropriate development and use of adjacent properties or impair their value;

ii) The proposed development will not adversely affect community character or appearance; and

iii) The proposed use complies with the goals and objections of the Comprehensive Plan.

s) The Planning Board may impose conditions on its approval of a special use permit and site plan under this Section in order to enforce the standards referred to in this Section or in order to discharge its obligations under the State Environmental Quality Review Act (SEQRA).

4. Additional Requirements.

a) Public Hearing. The Planning Board shall hold at least one public hearing on the application. Notice shall be published in the Town's official newspaper, at least then (10) days before any hearing. The applicant shall be required to mail notice of the public hearing to all landowners whose property is located within one thousand (1,000) feet of the Site Boundary, at least then (10) days prior to the date of said public hearing. Notification shall be made by regular U.S. Mail, and proof of such mailing shall be present t o the Board at the public hearing.

b) Installation. All solar collector installations must be performed by a Qualified Solar Installer. Prior to operation, electrical connections must be inspected by the Town Code Enforcement Officer and by the New York Board of Fire Underwrites or other appropriate electrical inspection person or agency, as determined by the Town. In addition, the connection to the public utility grid must be inspected by the appropriate public utility.

c) Insurance. The owner or operator shall maintain general liability insurance coverage on any solar energy system in the amounts of $1,000,000 for injuries and $500,000 for property damages, naming the Town of Amsterdam as additional insured.

b) Damages. If in the course of the delivery, installation, maintenance, dismantling, removal or transport of the solar energy system or any components thereof the property of the Town of Amsterdam, including but not limited to roadways, shoulders, drainage structures, signage, guide rails, etc., is damaged by the efforts of the applicant or any agents thereof, the applicant shall, within 30 days of the damage, completely replace or repair all damage to the satisfaction of the Town.

c) Debris. Any damaged or unused components of the system shall be removed from the premises within 30 days and disposed of legally. All maintenance equipment and spare parts shall be kept in a designated storage area which is fenced and screened.

d) Change of Ownership. If the ownership of a solar energy system changes, the special use permit and site plan approvals shall remain in full force and effect providing all the conditions of the special use permit, including bonding, letters of credit or continuing certification requirements or obligations, including maintenance, continue to be obligations of successor owners. The change in ownership shall be registered with the Town Clerk with a copy to the Code Enforcement Officer/Building Inspector within 30 days of the change taking effect. The Town Clerk shall notify the Planning Board of such change.

e) Permit Amendment. Any and all modifications, additions, deletions, or changes to the Solar Energy System, whether structural or not, shall be subject to the Planning Board's approval as an amendment of the special use permit and/or site plan, except that such amendment shall not be required for repairs which become necessary in the normal course of use of such system.

f) Inspection Report. An inspection report prepared by a duly qualified engineer licensed in the State of New York shall be required at the time of installation and every three years thereafter. The cost for this inspection shall be borne by the applicant and/or the current owner. The inspection report is required at the time of installation and in advance of powering the system for use. Thereafter, it shall be done to inspect all components of the solar energy system to ensure proper operation. The inspection report must be filed with the Code Enforcement Officer/Building Inspector. All recommendations for maintenance and repair contained in said inspection report shall be completed at the expense of the applicant/owner and shall be conducted within a written scheduled time frame agreed upon by the Code Enforcement Officer/Building Inspector.

g) Decoration. No part of the Solar Energy System, including area of lot coverage, shall be used for the display of any advertising, decorative flags, streamers, or any other decorative items.

h) Safety. When any Solar Energy System is installed and before it becomes active, the owner of the site and/or the Solar Energy System must contact the Town's emergency responder departments to make arrangements for a meeting at the site to review the components of the array and to be educated on safety issues and procedures for emergency response. This shall include detailed discussion related to the location of labeled warnings, access to the site and information on emergency disconnection of the system. In addition, the Planning Board may require a plan for installation regarding the location of placards which provide mutual aid responders with sufficient information to protect them when responding to calls on site.

i) Maintenance. Native grasses and vegetation shall be maintained below the arrays and shall not include use of herbicides.

j) Annual Documentation. The owner of a solar energy system shall annually, by January 15, file a declaration with the Town of Amsterdam Code Enforcement Officer certifying the continuing safe operation of said system installed subject to these regulations, as well as the status notification set forth in subsection f above. Failure to file a declaration shall mean that the system is no longer in use and shall be considered abandoned.

5. Decommissioning and Abandonment.

Utility-Scale Solar Energy Systems are considered abandoned after 12 months without electrical energy generation and must be removed from the property. Applications for extensions may be submitted to and are reviewed by the Planning Board for a period of additional 6-month periods not to exceed a total of 12 additional months. At the time that a system owner plans to abandon or discontinue operation of a solar energy system, such owner must notify the Town, in writing, of the proposed date of abandonment, or discontinuance of operations. In the event that a system owner fails to give notice, the system shall be deemed abandoned upon such discontinuance of operations. In any event, a Solar Energy System shall also be considered abandoned when it has not been used for the purpose for which it was permitted, for a period of 12 months. Upon abandonment or discontinuance of use, the system owner or operator shall in addition to complying with the decommissioning plan, assure, if not part of the approved decommissioning plan, physical removal of the Solar Energy System, and all accessory structures and/or equipment within 90 days from the date of abandonment or discontinuance of use. "Physically remove" shall include, but shall not be limited to:

(i) removal of panels, collectors, support units (including all underground wiring), mounts, equipment shelters and security barriers from the property;

(ii) proper disposal of the waste material from the site in accordance with local and state solid waste disposal regulations; and

(iii) restoring the land area where the Solar Energy System was located to its natural condition, except that any landscaping and grading may remain in the "after" condition.

If the owner of the system fails to properly remove said Solar Energy System and associated structures and equipment within 90 days from the date of abandonment, the Town may exercise its option to remove said system at its own discretion upon notification to the owner of the system and the property owner, at the expense of the owner or owners for which the surety, as described below, shall be used. The applicant must provide the Town with written authority from the owner or owners of record for the subject property where the Utility-Scale Solar Energy System is located to bind successors and assigns to allow the Town to enter onto the subject property to physically remove the system in the event that the party identified as the party responsible for removal of the System fails to timely remove the system in accordance with the requirement of this Section and the special use permit.

6. Performance Bond and Other Security.

Prior to commencement of construction of the approved Solar Energy System, the applicant shall provide the Town with a bond or other acceptable security in an amount determined by the Planning Board, but in no case less than 125% of the cost for the removal of the system and remediation of the landscape, in the event the Town must remove the facility. The terms of the bond or other security shall be clear as to who is responsible for removal of the System, the time in which removal must occur, and when or upon what circumstances the security is to be transferred to the Town.

If the applicant or owner/operator fails to comply with any conditions of the approval during construction or as part of the long-term maintenance of the site, all costs of the Town incurred to comply with conditions of the approval shall be paid using the surety provide. Failure to comply with the conditions of the approval or to maintain an acceptable level of surety will result in revocation of the Certificate of Occupancy.

The bond or security instrument shall also be in a form acceptable to the Town's legal counsel, which includes but is not limited to letter of credit, perpetual bond, or any combination thereof. The amount of the bond or security shall be reviewed from time to time by the Planning Board and shall be adjusted if deemed necessary by the Planning Board. If the amount of the bond or security is adjusted, the applicant shall have 90 days from the date of the notice that adjustment is required to provide an adjustment bond or security in a form acceptable to the Town's legal counsel.